improve your life

CE

EN

HYDRO ZEN WF

ULTRASONIC HUMIDIFIER



OPERATING INSTRUCTIONS

Read the instructions carefully before operating the appliance or carrying out maintenance work. Observe all the safety instructions; failure to do so may lead to accidents and/or damage. Store these instructions in a safe place for future reference.

V 12/25

GENERAL OPERATING AND SAFETY INSTRUCTIONS

- The appliance is a very effective humidifier: use this humidifier only as described in this manual. Any other use not recommended by the manufacturer may cause fire, electric shock, or malfunction.
- Make sure that the type of electrical power supply complies with the electrical requirements of the product (220-240V~50 Hz).
- This product is not a toy. Children must be supervised to ensure that they do not play with the appliance.
- Children must not play with the appliance
- This appliance can be used by children aged from 8 years and above and by persons with reduced physical, sensory or mental capabilities, or lack of experience or knowledge, if they have had the benefit, through the intermediation of a person responsible for their safety, of supervision or instructions regarding the use of the appliance and therefore understand the possible risks inherent to it.
- Cleaning and maintenance intended to be carried out by the user must not be carried out by children without supervision.
- Disconnect the power supply from the mains when not in use or cleaning. An inserted power plug may cause electric shock or accidents.
- To disconnect the appliance, turn the switch to the OFF position and remove the plug from the socket. Pull only the plug. Do not pull the cord when turning off the humidifier.
- Do not insert objects into the mist outlet. This may cause electric shock, malfunction or other accidents.
- Do not bend, drag, twist or pull the cord with force.
- **Do not use the appliance if the cord or plug is damaged.** If the power cord is damaged, it must be replaced by the manufacturer or its technical assistance service or a similarly qualified person in order to prevent any risk.
- Do not use the appliance in the presence of other electrical appliances such as computers or precision instruments. Moisture or white powder in the moisture may cause the appliances to malfunction.
- When an abnormality (such as a burning smell or abnormal noise) occurs, turn off the appliance and remove the plug immediately. Do not disassemble, repair or modify this product freely. In case of malfunction, contact the service center directly.

- Do not immerse the cord, plug or any other part of the appliance in water or other liquids.
- Do not touch the plug with wet hands.
- Do not inhale the steam emitted from the nozzle.
- Do not use acidic or basic solvents to clean the inside of this appliance: the residues could affect the proper functioning of the appliance.
- Do not use the appliance on unstable surfaces, otherwise the flow of water coming out could wet the floor or cause malfunction.
- Do not place the appliance on a high or sloping surface, otherwise it could fall during a vibration or an accidental push. Placing the appliance on a sloping surface could cause a malfunction of the device that controls the water level in the humidifier, resulting in a stoppage of operation or water leakage.
- Do not expose the humidifier directly to sunlight and do not place the appliance on or near an air conditioner: this could cause deformation, discoloration or malfunctions.
- Do not place the appliance on furniture or on a support with poor heat resistance: this could cause deformation, discoloration of the base due to overheating.
- Do not place the appliance in places with a strong magnetic field: this could cause malfunctions.
- Do not place the appliance on blankets or carpets. This could block the air intake under the appliance and cause failures or malfunctions.
- Do not place the appliance on or near furniture or curtains. The steam could wet the furniture or curtains causing discoloration or shape. Furthermore, the white powder contained in the steam could alter the surface of the furniture: it is therefore advisable not to direct the steam jet directly towards the furniture.
- Do not use the appliance in the immediate vicinity of bathtubs, showers, sinks or swimming pools.

WARNING

- **To move the appliance, lift the base without tilting the unit, to avoid water spills.**
- To fill or empty the tank, hold the upper part of the unit on both sides.
- During operation, do not open the appliance, do not come into contact

with the water that forms in the lower part, do not scratch the atomizer or the ceramic disc with hard objects.

- The internal ultrasonic nebulizer is highly sensitive. Do not touch it with your fingers or rub it with metal accessories to avoid reductions in the emission of steam.
- CAUTION: An excessively humid environment sively humid can encourage the proliferation of microorganisms: therefore, avoid curtains or carpets from absorbing excessive humidity.
- It is also a good idea to remove any water remaining in the tank after each use and refill the water tank with clean water every day.
- Clean the water tank and the nebulizer every 3 days and keep them clean. Do not add aromatic fragrances to the water in the tank.
- Do not connect the appliance to the power supply if there is no water in the tank or the appliance is upside down: this will cause the nebulizer to malfunction.
- Do not move the appliance during operation: this could cause water leaks or malfunctions.
- During operation, do not touch the water or the internal parts of the appliance with any part of the body.
- During the winter season, the water in the tank could freeze, causing malfunctions. Remove the water from the tank.
- Maintain the appliance by thoroughly cleaning the tank and the nebulizer regularly. Continuous operation of the appliance with dirt deposits may cause operational failures and malfunctions.
- When cleaning, be careful not to allow water to spill into the base of the appliance, to avoid damage.
- Do not leave water in the tank and water duct if the product is not in use.
- Do not insert water or objects into the air inlet and outlet, do not block the air inlet and outlet. Do not insert water directly into the water duct.

WARNING: THE POWER SWITCH IS NOT THE SOLE MEANS OF DISCONNECTING THE POWER SUPPLY. WHEN THE APPLIANCE IS NOT IN USE, MOVED OR MAINTAINED, ALWAYS REMOVE THE PLUG FROM THE SOCKET.

- Do not use hot water to avoid damage to the parts that generate steam.

The manufacturer cannot be held responsible if the indicated safety and accident prevention regulations are not respected.

DESCRIPTION OF THE APPLIANCE

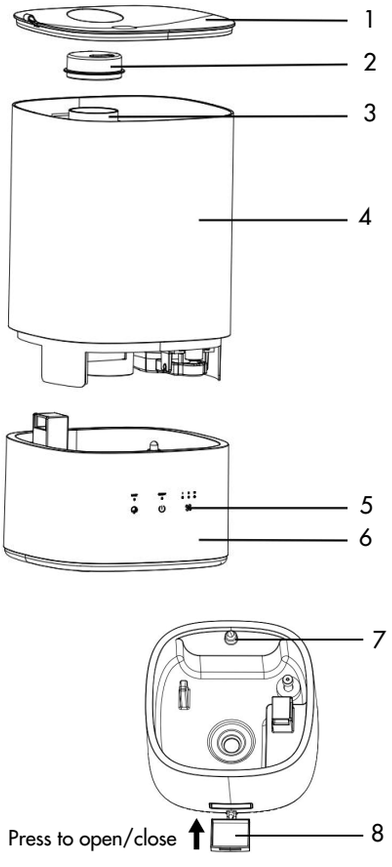

1. Steam outlet cover
2. Steam outlet cap
3. Steam outlet tube
4. Water tank
5. Touch control panel
6. Base
7. Night light
8. Compartment with sponge for essential oils

OPERATIONS BEFORE START UP

Place the humidifier on a flat, stable surface, keeping it at least 15 cm away from the wall and other objects. The humidifier should be placed on a water-resistant surface, avoiding carpets, tablecloths or any absorbent surface. Make sure that the cable is not connected to the power supply when water is added to the humidifier.

In order for the humidifier to work, water must be added to the appliance.

Option 1: Remove the lid following the direction of the arrow (Fig.1) and insert the water directly into the tank (Fig.2)

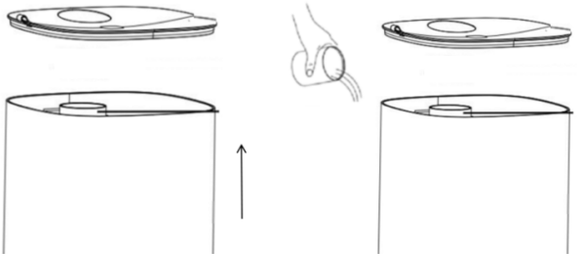

Fig.1 Fig.2

Option 2: Remove the lid following the direction of the arrow (Fig.1), lift the water tank following the direction of the arrow (Fig.2). After inserting water into the base of the unit, replace the tank and the lid, following the direction of the arrow (Fig.3).

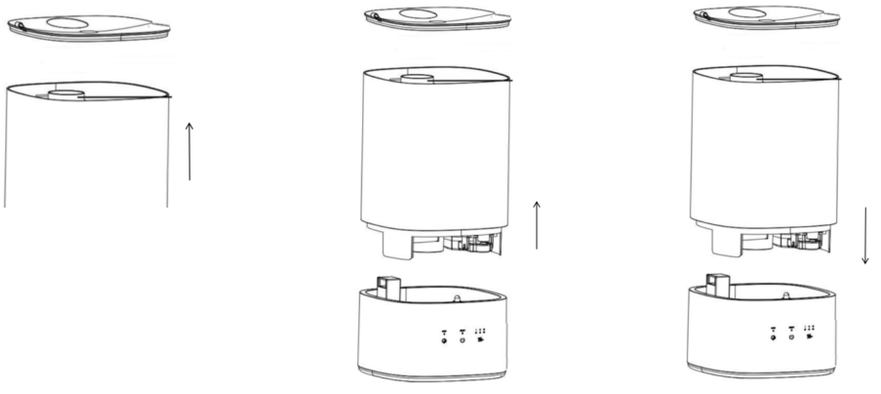

Fig.1 Fig.2 Fig.3

OPERATION OF THE UNIT

CONTROL PANEL

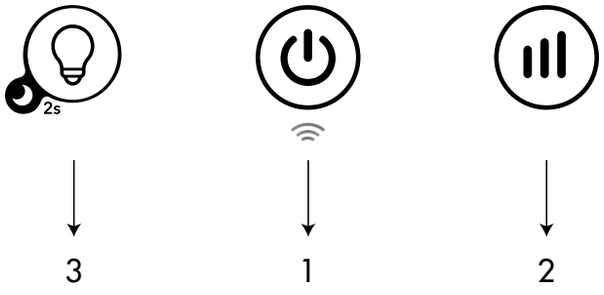

1. POWER AND WIFI BUTTON
   Press the POWER button to turn the unit on or off.
   Press and hold this button to configure the Wifi (see Wifi Guide section).

2. STEAM EMISSION LEVEL BUTTON
   Press this button to adjust the steam emission level in the following circular sequence: low - medium - high.
   If the mist adjustment light flashes, it's a reminder to clean the humidifier, which is recommended after 3 days of continuous use. Press and hold the mist output speed button and the LED will stop flashing.

3. SLEEP AND NIGHT LIGHT BUTTON
   Press this button to activate or deactivate the night light.
   Press the button for 2 seconds to activate the Sleep function. To deactivate it, press any button on the control panel.

   EMPTY TANK ALARM
   If there is no water in the tank or if the tank is not correctly positioned, the unit emits a sound signal, the LED corresponding to the Power button lights up red and the humidifier stops emitting steam although it continues to operate. To restore normal operation, add water to the tank or reposition the tank correctly.

WIFI GUIDE

INFORMATION ON THE "SMART LIFE" APP

The "Smart Life" App is available for Android and iOS. Scan the corresponding QR code to directly access the download.

Smart Life App download

INFORMATION ON USING THE APP

- The presence of an integrated wifi module allows you to manage the functions of the device via the home network.
- The prerequisites are a permanent Wi-Fi connection to the home modem and the free "Smart Life" app.
- Download and install the "Smart Life" App on your smartphone or tablet. Create your account and log in
- Activate the WIFI function on the device.
- Place the device at a distance of approximately 5 meters from the router.
- Long press Wifi button to start the network setup, when the WIFI indicator flashes, you can connect the WIFI.

CARE AND MAINTENANCE

WARNING!
Before cleaning and maintenance, remove the plug from the electrical outlet.
IMPORTANT: DO NOT IMMERSE THE HUMIDIFIER IN WATER.

1. Cleaning the casing
   Turn off the appliance and remove the plug before cleaning or moving the appliance. Use a soft cloth to remove dust from the product. If this is not enough, use a soft cloth moistened with water and a neutral detergent at a temperature below 40°C.
   Allow the appliance to dry completely before using it.
   Do not apply corrosive detergents or solvents such as petrol or bleach.
   When cleaning, do not use oils, chemicals or other objects that may damage the surface.
   If the surface of the unit becomes wet during use, reduce the humidity level in the room and dry carefully.

2. Cleaning the base
   Remove any residual water from inside the base. Rinse with fresh water using a soft cloth, if necessary. Do not immerse the base in water.

3. Cleaning the water tank
   Empty the tank. Remove the lid and clean the tank with fresh water or a solution of vinegar or dishwashing liquid using a soft cloth. Rinse thoroughly with water.

4. Cleaning the ultrasonic nebulizer
   After disconnecting the unit from the power supply, remove the tank and remove any water residue from the tank and base. Use only the brush provided and clean the nebulizer very gently, taking great care not to scratch or damage it.

   Removing limescale
   Depending on the type of water used, it may be necessary to clean the unit weekly or less frequently to prevent limescale from forming inside the unit. If the water is particularly hard and full of limescale, it is advisable to use distilled water.
   If limescale removal becomes difficult, use the brushes provided and follow the procedure below:
   Prepare a solution of white vinegar (1 tablespoon) and water (1 tablespoon).
   Leave the solution to act for 5 minutes.
   Use the solution to clean the inside of the base with a soft cloth.
   If necessary, also clean the components inside the base of the product.
   Carefully remove the solution from the base with water.

5. Storage
   When not in use, unplug the power cord and store the appliance together with this manual in the original box in a cool, ventilated place. Make sure to store the product after carefully drying the product and completely eliminating any residual water

6. For maximum safety, periodically check the condition of the power cord; if it is damaged by use, contact an authorized Service Center for replacement.

When a fault occurs, do not attempt to repair the humidifier, check whether it can be resolved by consulting the table below. If the problem persists, contact an Argoclima Service centre.

Problem	Possible cause	Solution
No steam is produced	The appliance is switched off	Turn on the unit with the Power button
	The plug is not inserted correctly	Remove the plug from the power outlet and try turning the unit on again
	Power failure	Wait for the power to be restored and turn the unit on
	Water tank not inserted	Place the water tank correctly
	The surface of the ultrasonic nebulizer is dirty	Clean the ultrasonic nebulizer as per the instructions in this manual
Air comes out of the product but no steam	The surface of the ultrasonic nebulizer is dirty	Clean the ultrasonic nebulizer as per the instructions in this manual.
There is an unusual smell	Improper cleaning of the unit or presence of dirty water	Clean the unit thoroughly and insert fresh water
A white powder forms on surfaces near the unit	If the water is particularly hard and rich in limestone, a certain quantity of limestone dust may form, which adds to the steam that the unit emits into the environment.	It is recommended to use distilled water free from limescale and to carefully clean the unit from any limescale residues.
The unit stops working	There is no water or the level is too low	Unplug the unit from the power supply and add water
There is an abnormal noise that increases in intensity	The unit may be placed on an unstable or tilted surface	Place the humidifier on a flat, stable surface.
Water comes out of the unit when inserted into the tank	There may be excess water in the tank	Check the water level in the tank
The steam output speed light flashes	Indicates the need for cleaning after 3 days of continuous use	Press and hold the steam output speed button and it will stop flashing



INFORMATION FOR CORRECT DISPOSAL OF THE PRODUCT IN ACCORDANCE WITH THE EUROPEAN DIRECTIVE 2012/19/EU

At the end of its working life this equipment must not be disposed of as an household waste. It must be taken to special local community waste collection centres or to a dealer providing this service. Disposing of electrical and electronic equipment separately avoids possible negative effects on the environment and human health deriving from an inappropriate disposal and enables its components to be recovered and recycled to obtain significant savings in energy and resources. In order to underline the duty to dispose of this equipment separately, the product is marked with a crossed-out dustbin.

improve your life

www.argoclima.com

Argoclima assumes no responsibility for any errors or inaccuracies in the content of this manual and reserves the right to make to this, at any time and without notice, any changes deemed appropriate for any technical or commercial need.