improve your life

CE

EN

THOR PLUS

PORTABLE AIR CONDITIONER (LOCAL)



OPERATING INSTRUCTIONS

Read the instructions carefully before operating the appliance or carrying out maintenance work. Observe all the safety instructions; failure to do so may lead to accidents and/or damage. Store these instructions in a safe place for future reference.

V 12/25



Appliance is filled with flammable gas R290.



Before installing and using the appliance, read the owner manual.

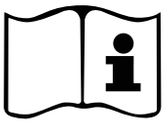

Before installing the appliance, read the installation manual.



Any repairs you need, contact the nearest authorized Service Centre and strictly follow manufacturer's Service Manual.

THE REFRIGERANT R290

- To realize the function of the air conditioner unit, a special refrigerant circulates in the system. The refrigerant is the fluoride R290 = 0,02 GWP (Global warming potential). This refrigerant is flammable and inodorous. It can lead to explosions under certain conditions, however the flammability of this refrigerant is very low and it can be ignited only by fire.
- Compared to other common refrigerants, R290 is a non-polluting refrigerant with no harm to the ozonosphere and a no effect upon the greenhouse effect. R290 has very good thermodynamic features which lead to a really high energy efficiency. The units therefore need less filling.

Warning:
Do not try to accelerate the defrosting process or to clean the appliance in different ways other than those recommended by the manufacturer.
Should repair be necessary, contact your nearest authorized Service Centre.
Any repairs carried out by unqualified personnel may be dangerous.
The appliance has to be stored in a room that doesn't have any continuously operating ignition sources. (for example: open flames, an operating gas appliance or an operating electric heater.)
Do not pierce or burn.
Appliance has to be installed, used and stored in a room with a floor area larger than 12 m^2.
The appliance contains flammable R290 gas.
Attention, refrigerants have no smell.





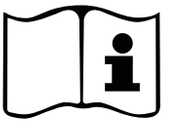



GENERAL OPERATING AND SAFETY INSTRUCTIONS

- This appliance is a local air conditioner designed for domestic use.
- Only use this air-conditioner as described in this manual.
- Ensure that the required voltage and frequency (220-240V~/50 Hz) match the available power source.
- Fuse style 5ET or SMT 250V, the electricity passing through the fuse cannot be above 3.15A.
- This appliance can be used by children aged from 8 years and above and people with reduced physical, sensory or mental capabilities or lack of experience and knowledge if they have been given supervision or instruction concerning use of the appliance in a safe way and understand the hazards involved.
- Children shall not play with the appliance.
- Cleaning and user maintenance shall not be made by children without supervision.
- Ensure that the electricity system is able to deliver the operating current required by the air conditioner, in addition to that normally absorbed by other appliances (household appliances, lighting system, etc.). Please refer to the maximum power input data indicated on the air conditioner's data plate.
- Connection to the electricity grid must take place in accordance with current installation standards.
- Ensure that the automatic switches and system protection valves are able to withstand a start-up current of 6A (normally for less than 1 second).
- The system socket must always be fitted with an efficient earth connection.
- Make sure that the plug is fully inserted. Do not use multiple adapters. Do not touch the plug with wet hands. Make sure that the plug is clean.
- Do not use the plug as a means by which to start/stop the air conditioner: use the ON/OFF button on the remote control or on the control panel.
- Do not install the air conditioner in rooms where it may receive water splashes (e.g. laundry rooms).
- This air conditioner can be used by children of 8 years of age or older, and by persons with reduced physical, sensory and mental abilities or who lack the necessary know-how and experience to operate it, if under the supervision or instruction of a person responsible for their safety, so that they are fully aware of the attendant risks.

- Before moving or cleaning the device, ensure that it is unplugged from the socket.
- Do not move the air conditioner while it is operating; first turn the appliance off, check for any condensate build-up and empty it if necessary.
- To turn the appliance off, set the remote control to OFF and remove the plug from the socket. Pull on the plug only. Do not pull the cord.
- **Do not use the appliance if the cord or plug are damaged.** If the power supply cord is damaged, it must be replaced by the manufacturer, dealer or a similarly qualified person so as to avoid any safety risks.
- Keep the unit away from fire, possible fire sources, inflammable or explosive objects.
- Do not leave the unit unattended while it's operating, turn the unit off and unplug it.
- If drainage hose is used, the ambient temperature musnt't be lower than 0 °C. It can cause water leakage to the air conditioner.
- Do not splash or pour water on the air conditioner

PRECAUTION!

- **Do not insert any objects into the air conditioner: this is very dangerous as the fan turns at high speed.**
- **Ensure that air circulates freely around the unit. Do not cover the air intake and delivery grilles with drapes or any other means.**

WARNING!

- The air conditioner must be positioned **at least 50 cm** from the wall or any other obstacles, on a flat and stable surface so as to avoid water leaks.
- **The air conditioner is fitted with a system for protecting the compressor from overload. This means that the compressor only starts 3 minutes after its previous stoppage.**
- **Please wait at least 3 minutes before starting the unit. This helps prevent the compressor from being damaged.**

WARNING!

- **In the event of an anomaly, switch the appliance off and unplug it from the socket. Do not dismantle or attempt to repair or modify the In the**

event of a malfunction, contact the service centre directly.

WARNING!

- Do not expose the air conditioner to direct sunlight, as the colour of the materials may change; moreover, the appliance may overheat causing the protection mechanism to intervene and switch the appliance off.
- Do not use insecticides, oils, detergents or spray paints near the appliance; do not use aggressive chemical detergents to clean the casing: this may damage the finish and colour.
- Close all open windows to maximise air conditioning efficiency.

The manufacturer will not be held liable if safety and accident prevention rules are not observed.

DESCRIPTION OF THE APPLIANCE

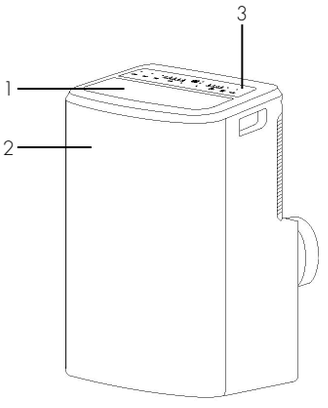

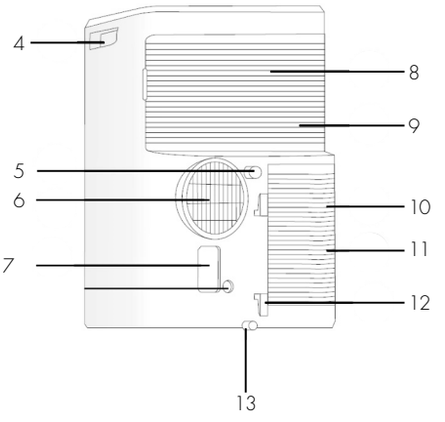

1. Air outlet
2. Front panel
3. Control panel
4. Handle
5. Hole for condensate drainage (in dehumidification mode)
6. Air outlet hose
7. Plug socket
8. Upper air filter
9. Upper air inlet
10. Lower air filter (not removable)
11. Lower air inlet
12. Power cord buckle
13. Hole for condensate drainage (in cooling mode)

Min/max operating limits (internal temperature)
Cooling: 16 °C B.S./35 °C B.S.
Dehumidification: 16 °C B.S./35 °C B.S.
Heating: 5 °C B.S./35 °C B.S.
Cooling mode room temperature adjustment range: 16 °C B.S./32 °C B.S.

PRE-OPERATING CHECKS AND OPERATIONS

The following space must be maintained to ensure the operating efficiency of the portable air conditioner.

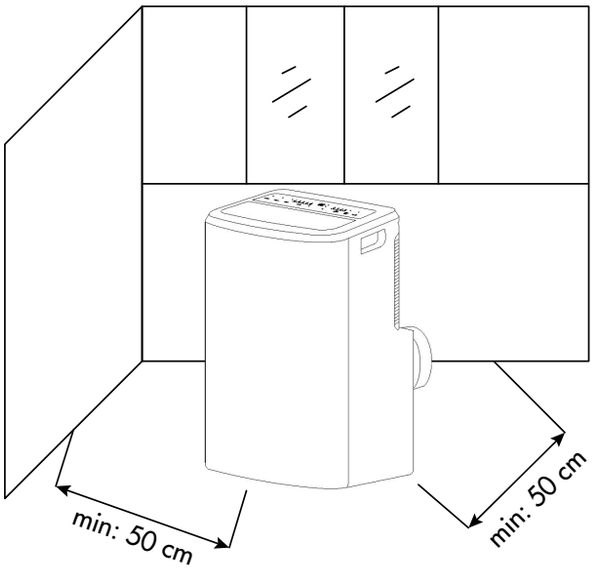

APPLIANCE START UP

Open the packaging and pull out the box. Remove the product and the other elements supplied (illustrated in the box below).



Remote controller



Battery for remote controller type AAA – LR03 – 1,5 V r

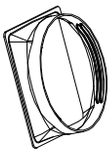

Fitting to apply on the unit to which connect the exhaust pipe of the air



Hose of expulsion of the air

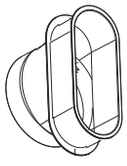

Terminal flat fitting to be placed between window knockers



Condensate drainage pipe to be used to empty the internal tank



Circular fitting for kit porthole to be positioned between the final part of the tube and the porthole

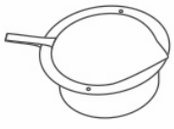

Porthole kit with cap

USE WITH END FITTING FOR WINDOW

1. Stretch the flexible hose sufficiently so that it reaches the outside (max 1.5 m) and hook it to the rear part of the air conditioner (Fig.1).
2. Open the window and lock one of the two leaves with the handle. Rest the terminal connection on the fixed leaf, bring the other leaf of the window close (Fig.2).

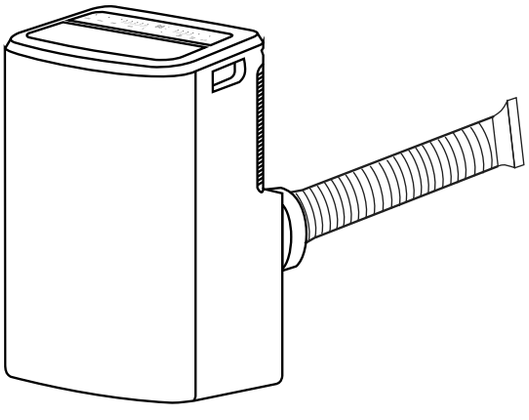

(Fig. 1)

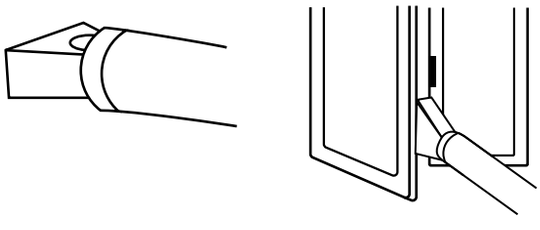

(Fig. 2)

USE WITH WINDOW UNIT KIT

1. To make the hole in the glass, it is also advisable to take the porthole kit accessory to the glazier (Fig. 1).
2. Insert the porthole into the window (Fig. 2).
3. Insert the circular connector for the porthole kit into the retractable hose and insert the retractable hose with the circular connector into the porthole without the cap (Fig. 3).
4. When not in use, disconnect the hose and close the porthole with the cap (Fig. 4).

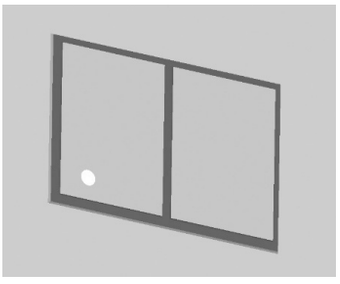

(Fig. 1)

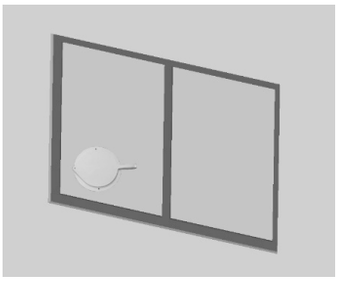

(Fig. 2)

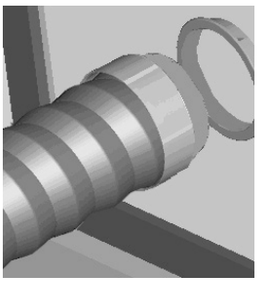

(Fig. 3)

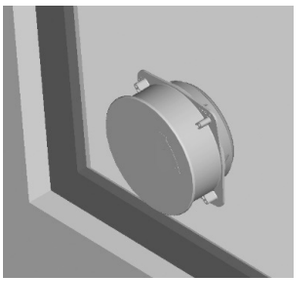

(Fig. 4)

Avoid tight bends or folds in the hose. The hose, once fully extended, must be placed at a higher height than the tube attachment positioned on the machine, approximately between 40 and 160 cm to ensure the correct height that does not compromise the performance of the air conditioner.

If the air conditioner is not used for prolonged periods, disconnect the pipe and plug the window unit.

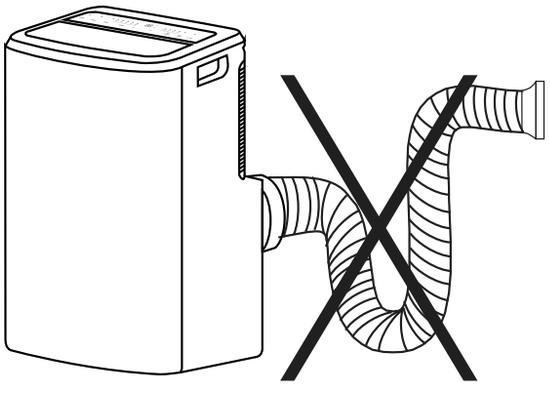

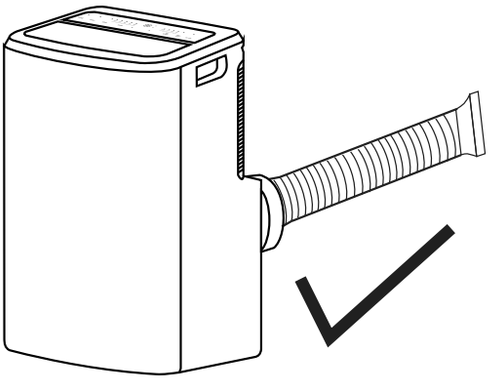

HOW TO USE THE APPLIANCE

This appliance can be used for Cooling, Heating, Dehumidification and Fan. Before using the appliance, leave it in an upright position for at least two hours.
Plug the power cord into an appropriate power outlet (220-240~V). Insert the supplied battery into the remote controller, observing the polarities. Select the desired operating mode from the remote controller.
The air conditioner is equipped with a protection system which causes the unit to activate in Cooling, Heating, Dehumidification and Heating mode only after an interval of approximately 3 minutes from the selection. Even when passing from one mode to another, the fan continues to operate, but the compressor stops to restart after 3 minutes. This start delay protects the compressor from overload.
This appliance is equipped with an automatic defrosting system which intervenes when the unit is running hot and ice forms on the coil. When the appliance starts defrosting, the Power LED flashes on the control panel. The compressor stops for 10 minutes, after which the appliance resumes normal operation.

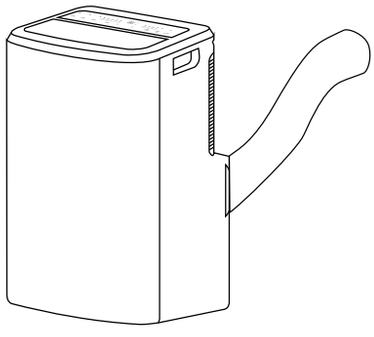

Cooling, Heating, Fan

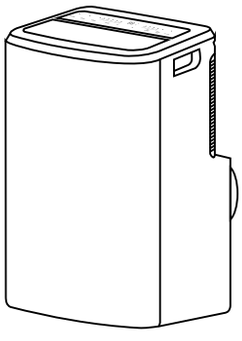

Dehumidifying

THE DISCHARGE TUBE MUST ALWAYS BE CONNECTED to the appliance: the only exception is when the appliance is used solely for dehumidification, in which case it is advisable to let the appliance discharge directly into the environment for maximum efficiency (consult the "Dehumidification Mode" paragraph).
Regularly clean the air filter to keep the air conditioner working efficiently.

OPERATING MODES

1. COOLING MODE (COOL)
   - Press the MODE button to select the cooling mode.
   - The LED ❄ on the control panel will turn on.
   - The temperature can be adjusted to between 16 °C and 32 °C.
   - In this mode, each time the ON/OFF button is pressed the unit switches off, the appliance saves the temperature setting and retains this setting when it is switched on again.
   - In this mode, the fan speed can be adjusted and the Timer and SLEEP functions can be set.
   - For more silent operation, run the fan at low speed.

2. HEATING MODE (HEAT)
   - Press the MODE button to select the heating mode.
   - The LED ☼ on the control panel will turn on.
   - The temperature can be adjusted to between 16 °C and 32 °C.
   - In this mode, the fan speed can be adjusted.

3. DEHUMIDIFICATION MODE (DRY)
   - Press the MODE button to select the dehumidification mode.
   - The LED 💧 on the control panel will turn on.
   - The temperature is controlled by the electronic board and cannot be adjusted.
   - In this mode, each time the ON/OFF button is pressed the unit switches off, the appliance saves the settings and retains them when it is switched on again.
   - The fan speed is set to low and cannot be adjusted.

NOTE

The air conditioner does not cool the room when operating as a dehumidifier.
When the appliance is used as a dehumidifier, the flexible pipe must not be connected.
For maximum dehumidification efficiency, **leave the rear discharge attachment free to discharge directly into the environment.**
The dehumidification mode is recommended during autumn and winter.
If used during summer, it is best to leave the flexible pipe attached so that the hot air is discharged towards the outside rather than into the room.
During dehumidification, continuous drainage should be implemented (see the next chapter, "HOW TO ELIMINATE CONDENSATE").

4. FAN MODE
   - Press the MODE button to select Fan mode.
   - The LED on the control panel will turn on.
   - In this mode, the fan speed can be adjusted.
   - The temperature cannot be adjusted.

5. AUTO MODE
   - Press the MODE button to select Auto mode.
   - The LED AUTO on the control panel lights up.
   - This mode allows the appliance to select the operating mode (Cooling or Ventilation) based on the temperature present in the room.

HOW TO ELIMINATE CONDENSATE

This appliance automatically vaporizes the condensation in **Cooling**.
When the air conditioner operates in **Cooling**, it is not necessary to have continuous condensate drainage; only in particular climatic conditions in which the air humidity is very high, it can happen that water is deposited inside the unit.
In **Heating** the condensate is not vaporised automatically, it will therefore be necessary to empty the internal tank periodically. Alternatively, drainage can be arranged from the lower hole on the back of the unit, taking care to position the air conditioner on a small riser to ensure the drainage tube has the necessary slope.

Cooling and Heating

This appliance automatically vaporizes the condensate in cooling mode. Make sure that, when the unit works in Cooling and Heating mode, the rubber caps that close the drain holes on the back are correctly positioned.
When the tank is full, the display shows the message "**P1**" indicating that it has been filled and blocks the operation of the appliance.
To empty the tank, turn off the air conditioner and unplug it. Remove the cap from the rear drain hole, connect the small condensate drain tube, which is supplied, and place the other end of the tube above a normal drain.
Make sure the hose is free from twists and bends. The pipe must have a descending trend. Close the drain with the cap and resume using the air conditioner.

Dehumidification

Warning: when using the air conditioner in **dehumidification mode, it is advisable** to always set up continuous drainage to ensure maximum dehumidification efficiency. Connect one end of the PVC tubing (provided) to the top drain hole and the other end above a drain.

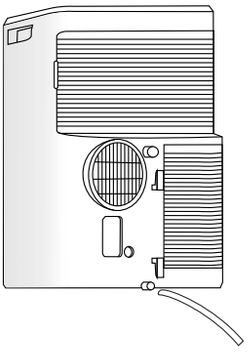

Manual drainage
(Cooling, Heating)

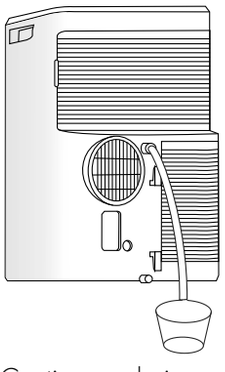

Continuous drainage
(Dehumidification)

FUNCTION CONTROL

BY REMOTE CONTROLLER

When using the remote control for the first time, install the batteries (supplied) making sure to position the two polarities "+" and "-" correctly. To insert the batteries, follow the instructions below:

1. Remove the cover by unscrewing the screw with a screwdriver.
2. Open the battery compartment by sliding the door outwards (observe the direction of the arrow).
3. Insert two new batteries, paying attention to the polarity.
4. Replace the cover in the battery compartment (observe the direction of the arrow).
5. Close the door by inserting the screw with a screwdriver.

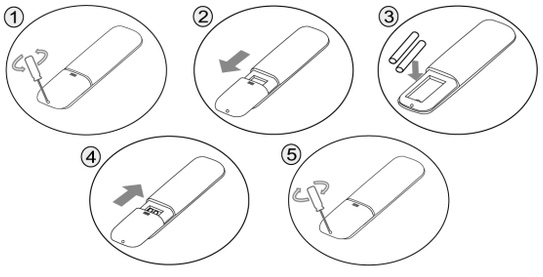

WARNINGS FOR BATTERIES

- Batteries should not be exposed to heat sources such as fire, sun or similar sources;
- remove the batteries if they start to heat up or you know you will not use the appliance for a long time the batteries must be installed correctly in the battery compartment;
- when removing the batteries because they are at the end of their life or damaged, comply with the national regulations in force for disposal (shown below);
- In the event of a battery fluid leak, remove all batteries, taking care not to let the leaked fluid come into contact with skin or clothes.
  If liquid from the battery gets on your skin or clothing, wash the skin with water immediately. Before inserting new batteries, thoroughly clean the battery compartment with a dry paper towel, or follow the battery manufacturer's recommendations for cleaning. Only use batteries of the same size and type.
  Caution: Danger of explosion if battery is replaced by a type other than that specified.
  Improper use of batteries can cause them to leak, overheat, or explode. This liquid is corrosive and can be toxic. It can cause skin and eye burns, and is harmful to ingest.
  To reduce the risk of injury:
- Keep batteries out of the reach of children.
- Do not heat, open, puncture, cut or throw batteries into fire.
- Do not mix old and new batteries or batteries of different types
- Do not leave metal objects that could come into contact with the battery terminals and therefore could heat up and/or cause burns.



INFORMATION FOR THE CORRECT DISPOSAL OF BATTERIES IN ACCORDANCE WITH REGULATION (EU) 2023/1542

Replace batteries when they are depleted. At the end of their life, batteries must be disposed of separately from unsorted waste. They must be taken to designated recycling centres or returned to a retailer providing this service. Separate disposal of batteries prevents potential negative effects on the environment and human health due to inadequate disposal, and also allows for recovering and recycling their constituent materials, resulting in significant savings in terms of energy and resources. The separate disposal obligation is underlined by the crossed-out dustbin symbol appearing on the battery. Illegal disposal of the product by the user implies administrative sanctions applied as per current regulations.

FOR OPTIMUM OPERATION OF THE REMOTE CONTROL, ADDRESS THE TRANSMITTER HEAD TOWARDS THE RECEIVER LOCATED ON THE AIR CONDITIONER.

CONTROL BY REMOTE CONTROLLER

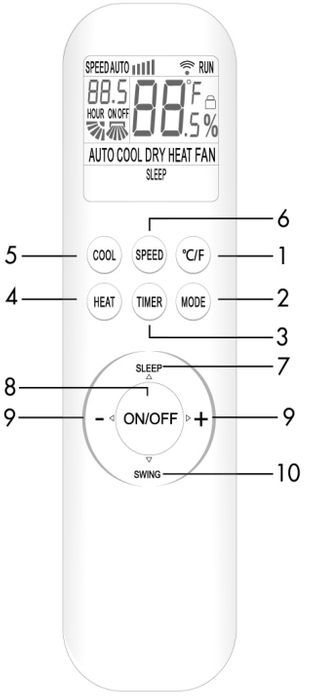

1. °C/°F button
2. MODE button
3. TIMER button
4. HEAT button (heating mode)
5. COOL button (cooling mode)
6. SPEED button (fan speed)
7. SLEEP button
8. ON/OFF button
9. + - buttons
10. SWING button

CONTROL BY CONTROL PANEL

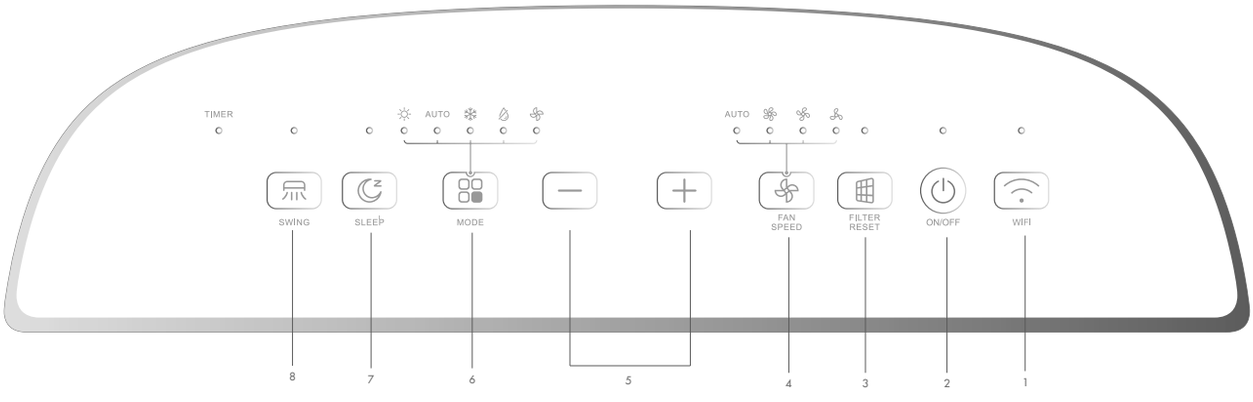

1. WIFI button
2. ON/OFF button
3. FILTER RESET button
4. FAN SPEED button
5. UP/DOWN (+/-) buttons
6. MODE button
7. SLEEP button
8. SWING button

1. WIFI BUTTON by control panel
   Press this button to turn on/off Wifi operation (for Wifi configuration refer to the paragraph Wifi Guide).

2. ON/OFF BUTTON
   Press this button to turn the unit on or off.
   When switched on, the appliance will start operating according to the last settings (Memory function).

3. FILTER RESET BUTTON
   This LED indicator comes on every 250 hours of use to signal that the air filter need to be cleaned. Once cleaned, press the “FILTER RESET” button to reset the count of hours of use.

4. FAN SPEED BUTTON

Press this button when the appliance is on to adjust the fan speed in cooling (AUTO), high (High), medium (Med), low (Low) in the following circular sequence:

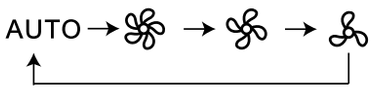

The corresponding LEDs light up on the control panel according to the selection made.
The fan speed cannot be adjusted in DRY mode and is fixed at low.
On the remote controller press SPEED button the adjust the fan speed in the following circular sequence:

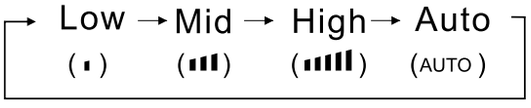

5. UP/DOWN (+/-) BUTTONS

Press "+" or "-" to regulate the temperature (the adjustment step is 1 °C) and set the timer (each time the keys are pressed the step is 0,5 hour). The temperature ranges from 16 °C to 32 °C, and the time ranges from 0,5h to 24h.

6. MODE BUTTON

Press this button to select the different operating modes, according to this sequence: Heating -> Auto -> Cooling -> Dehumidification -> Ventilation

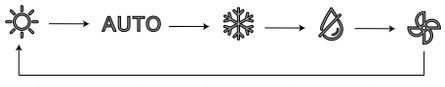

The corresponding LEDs light up on the control panel according to the selection made.

7. SLEEP BUTTON

- In operating mode, press "SLEEP" to enter 10 hours of intelligent sleep mode. After 10 hours, the air conditioner will exit Sleep mode to restore the previous mode.
- In Sleep mode, press "SLEEP" again, or press "MODE" or "ON/OFF" to exit Sleep mode.

Note: Sleep function is not available in ventilation mode. In Sleep mode there is no variation of the fan speed. In cooling mode, after the first hour, the set temperature increases by 1 °C, after the second hour it increases again by 1 °C; after the 5th hour it decreases by 1C°, continues like this for another 3 hours and then exits the Sleep function continuing to operate normally in cooling mode.

8. SWING BUTTON

Press this button to activate or deactivate the automatic swing of the horizontal air louvers.

°C/°F BUTTON (on the remote control)

Press this button on the remote control to change the temperature display from °C to °F.
By default, the temperature is displayed in °C.

TIMER BUTTON (on remote controller)

- When the air conditioner is off, press "TIMER" to set a time to turn on the unit. The ON icon on the display will flash. Press "+" or "-" to set the time, each press corresponds to 0.5 and is programmable up to 24 hours. Press "TIMER" again to confirm and the ON icon will stop flashing.
- When the air conditioner is on, press "TIMER" to set the time to turn off the unit. Each press corresponds to 0.5 and is programmable up to 24 hours. The OFF icon on the display will flash. Press "+" or "-" to set the time and press "TIMER" again to confirm. The OFF icon will stop flashing.

Without any operation within 10 seconds from when the ON/OFF icon flashes, the Timer function will not be activated or deactivated. To cancel the function, press the "TIMER" button. The LED corresponding to the Timer on the control panel will light up.

CHILD LOCK (function that can be activated with the combination of keys on the remote control)

Press the HEAT and MODE buttons on the remote control at the same time for 3 seconds to activate/deactivate the buttons on the air conditioner control panel.
When the function is activated, the icon is visible on the remote control display

TEMPERATURE DISPLAY AND ERRORS

With the exception of message P1, tank full, when an error occurs do not attempt to repair the air conditioner, always take it to an Argoclima Assistance Centre, otherwise the guarantee will no longer be valid.

Problem	Cause	Solution
E1	Room temperature sensor failure.	Contact a service centre.
E3	Failure of temperature sensor on the evaporator.	Contact a service centre.
E4	Lower DC motor error	Contact a service centre.
E8	Communication faults between main PCB and display PCB.	Contact a service centre.
P1	Alarm of full water tank.	Connect the PVC pipe to the condensate drain hole.

WIFI GUIDE

INTRODUCTION

The air conditioner is equipped with remote control technology, with a Wi-Fi module inside the appliance connected to the display and the air conditioner control. The air conditioner must be in constant connection with a wireless router or access point connected to the internet. Mobile devices such as smartphones and tablets, on which dedicated applications are installed and Wi-Fi modules subsequently configured, can be used as remote controls once connected to the internet.

DOWNLOAD AND INSTALL THE CONTROL SOFTWARE

The control software can be downloaded and installed as follows.

1. For mobile devices such as smartphones and tablets, search and download "SmartLife" from Google Play or App store and install it.
2. You can also scan the "QR code" below, which will automatically direct you to the download interface for installing the software.
3. Follow the instructions on the App step by step.

RESET OF THE WI-FI MODULE

With the unit turned on, press the COOL and + buttons simultaneously for 3 seconds. When you hear 8 "beep beeps", do not release the button. After hearing two more "beep beeps", release the button.
From the control panel: long press the Wifi button and release the button when you hear 8 "beep beeps".

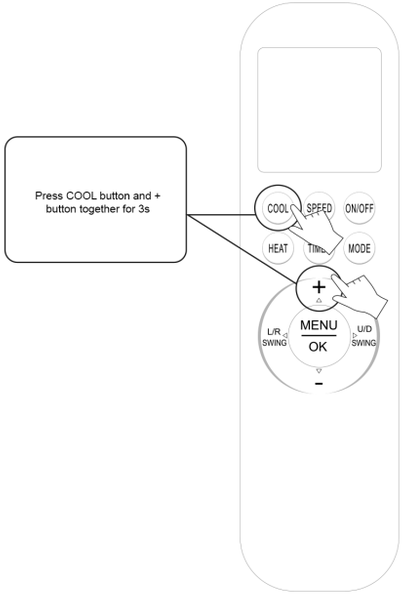

CONNECTING THE INDOOR UNIT TO THE SMART LIFE APP

Once logged in, you can add the unit by scanning the QR code below from the Smart Life app. This QR CODE is also shown on the side of the unit, to make connection even easier and more immediate.

CARE AND MAINTENANCE

WARNING!
Before carrying out any cleaning or maintenance operations, unplug the appliance.

1. Cleaning the air filter
   The air filter should be checked at least once every two weeks of operation. Operating with a dirty or clogged filter always reduces the air conditioner's efficiency and can cause serious problems. To remove the filter, unhook the rear grille and use a vacuum cleaner to remove the dust.
   The lower air filter is screwed on and cannot be removed; use a vacuum cleaner to clean it.

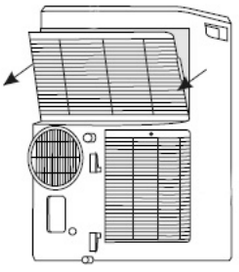

2. Cleaning of casing
   Use a damp and soft cloth to clean the outer surface of the appliance. Do not use excessively hot water, solvents, petrol or other aggressive chemical compounds, talcum powder or brushes: these may damage the surface or colour of the casing. Remove any stains using lukewarm water with a little neutral detergent. Do not pour water onto the air conditioner to clean it, as this may damage its internal components or cause a short-circuit.

3. Storage
   When the air conditioner is not expected to be used for a long time, clean the filters before storing it away. Keep the appliance in a vertical position at all times. Do not place heavy objects on top of the air conditioner. It is advisable to protect the appliance with a plastic sheet.

4. Transport
   Transport the air conditioner in the vertical position. Should this not be possible, rest it on its right-hand side; when the appliance reaches its final destination, place it immediately in the vertical position and wait at least 4 hours before operating it in cooling mode.

5. For complete safety, regularly check the condition of the power cord; should it be damaged as a result of wear, contact the Service Centre to replace it.

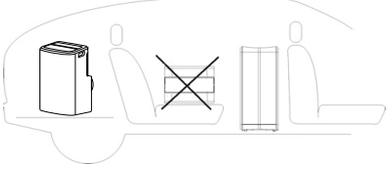

TIPS FOR MAXIMIZING COMFORT AND MINIMIZING CONSUMPTION

CHECK that:

- the unit intake and delivery grilles are always free;
- the air filters are always clean; a dirty filter will decrease the passage of air and reduce the unit's performance;
- all doors and windows are closed, so as to avoid infiltration of unconditioned air;
- the flexible pipe is correctly positioned, without tight bends or curves;
- the room temperature is above 16 °C in cooling and 10°C in dehumidifying.

REGULATION (EU) No. 517/2014 – F-GAS

The unit contains R290, a natural greenhouse gas with global warming potential (GWP) = 0,02 - Kg. 0,265 = 0,0000053 Tons CO_2 equiv. Do not release R290 into the atmosphere.



INFORMATION FOR CORRECT DISPOSAL OF THE PRODUCT IN ACCORDANCE WITH THE EUROPEAN DIRECTIVE 2012/19/EU

At the end of its working life this equipment must not be disposed of as an household waste. It must be taken to special local community waste collection centres or to a dealer providing this service. Disposing of electrical and electronic equipment separately avoids possible negative effects on the environment and human health deriving from an inappropriate disposal and enables its components to be recovered and recycled to obtain significant savings in energy and resources. In order to underline the duty to dispose of this equipment separately, the product is marked with a crossed-out dustbin.

Aptitude requirement for maintenance man (repairs should be done only be specialists).

- Any person who is involved with working on or breaking into a refrigerant circuit should hold a current valid certificate from an industry-accredited assessment authority, which authorises their competence to handle refrigerants safely in accordance with an industry recognised assessment specification.
- Servicing shall only be performed as recommended by the equipment manufacturer. Maintenance and repair requiring the assistance of other skilled personnel shall be carried out under the supevision of the person competent in the use of flammable refrigerants.

Safety preparation work

The maximum refrigerant charge amount is shown on the following table a
(Note: Please refer to the nameplate for the charging quantity of R290).

Dimensione stanza (m^2)	4	11	15
Carica massima (kg)	<0.152	0.225	0.304

Table a - Maximum charge (kg)

Security checks

Prior to beginning work on systems containing flammable refrigerants, safety checks are necessary to ensure that the risk of ignition is minimised. For repair to the refrigerating system, the following precautions shall be complied with prior to conducting work on the system.

- Work procedure
  Work shall be undertaken under a controlled procedure so as to minimise the risk of a flammable gas or vapour being present while the work is being performed.

- General work area
  All maintenance staff and others working in the local area shall be instructed on the nature of work being carried out. Work in confined spaces shall be avoided. The area around the workspace shall be sectioned off. Ensure that the conditions within the area have been made safe by control of flammable material.

- Checking for presence of refrigerant
  The area shall be checked with an appropriate refrigerant detector prior to and during work, to ensure the technician is aware of potentially toxic or flammable atmospheres. Ensure that the leak detection equipment being used is suitable for use with all applicable refrigerants, i.e. non-sparking, adequately sealed or intrinsically safe.

- Presence of fire extinguisher
  If any hot work is to be conducted on the refrigeration equipment or any associated parts, appropriate fire extinguishing equipment shall be available to hand. Have a dry powder or CO_2 fire extinguisher adjacent to the charging area.

- No ignition sources
  No person carrying out work in relation to a refrigeration system which involves exposing any pipe work shall use any sources of ignition in such a manner that it may lead to the risk of fire or explosion. All possible ignition sources, including cigarette smoking, should be kept sufficiently far away from the site of installation, repairing, removing and disposal, during which refrigerant can possibly be released to the surrounding space. Prior to work taking place, the area around the equipment is to be surveyed to make sure that there are no flammable hazards or ignition risks. "No Smoking" signs shall be displayed.

- Ventilated area
  Ensure that the area is in the open or that it is adequately ventilated before breaking into the system or conducting any hot work. A degree of ventilation shall continue during the period that the work is carried out. The ventilation should safely disperse any released refrigerant and preferably expel it externally into the atmosphere.

- Checks to the refrigeration equipment
  Where electrical components are being changed, they shall be fit for the purpose and the correct specification. At all times the manufacturer's maintenance and service guidelines shall be followed. If in doubt, consult the manufacturer's technical department for assistance.

The following checks shall be applied to installations using flammable refrigerants:

- The actual refrigerant charge is in accordance with the room size within which the refrigerant containing parts are installed;
- The ventilation machinery and outlets are operating adequately and are not obstructed;
- If an indirect refrigerating circuit is being used, the secondary circuit shall be checked for the presence of refrigerant;
- Marking to the equipment continues to be visible and legible. Markings and signs that are illegible shall be corrected;
- Refrigeration pipe or components are installed in a position where they are unlikely to be exposed to any substance which may corrode refrigerant containing components, unless the components are constructed of materials which are inherently resistant to being corroded or are suitably protected against being so corroded.

- Checks to electrical devices

  Repair and maintenance to electrical components shall include initial safety checks and component inspection procedures. If a fault exists that could compromise safety, then no electrical supply shall be connected to the circuit until it is satisfactorily dealt with. If the fault cannot be corrected immediately but it is necessary to continue operation, an adequate temporary solution shall be used. This shall be reported to the owner of the equipment so all parties are advised.

  Initial safety checks shall include:

  - That capacitors are discharged: this shall be done in a safe manner to avoid possibility of sparking;
  - That no live electrical components and wiring are exposed while charging, recovering or purging the system;
  - That there is continuity of earth bonding.

- Repairs to sealed components

  During repairs to sealed components, all electrical supplies shall be disconnected from the equipment being worked upon prior to any removal of sealed covers, etc. If it is absolutely necessary to have an electrical supply to equipment during servicing, then a permanently operating form of leak detection shall be located at the most critical point to warn of a potentially hazardous situation. Particular attention shall be paid to the following to ensure that by working on electrical components, the casing is not altered in such a way that the level of protection is affected. This shall include damage to cables, excessive number of connections, terminals not made to originai specification, damage to seals, incorrect fitting of glands, etc.

  - Ensure that the apparatus is mounted securely.
  - Ensure that seals or sealing materials have not degraded to the point that they no longer serve the purpose of preventing the ingress of flammable atmospheres. Replacement parts shall be in accordance with the manufacturer's specifications.

  NOTE: the use of silicon sealant can inhibit the effectiveness of some types of leak detection equipment. Intrinsically safe components do not have to be isolated prior to working on them.

- Repair to intrinsically safe components

  Do not apply any permanent inductive or capacitance loads to the circuit without ensuring that this will not exceed the permissible voltage and current permitted for the equipment in use. Intrinsically safe components are the only types that can be worked on while live in the presence of a flammable atmosphere. The test apparatus shall beat the correct rating. Replace components only with parts specified by the manufacturer. Other parts may result in the ignition of refrigerant in the atmosphere from a leak.

- Cabling

  Check that cabling will not be subject to wear, corrosion, excessive pressure, vibration, sharp edges or any other adverse environmental effects. The check shall also take into account the effects of aging or continual vibration from sources such as compressors or fans.

- Detection of flammable refrigerants

  Under no circumstances shall potential sources of ignition be used in the searching for or detection of refrigerant leaks. A halide torch (or any other detector using a naked flame) shall not be used.

- Leak detection methods

  The following leak detection methods are deemed acceptable for all refrigerant systems. Electronic leak detectors may be used to detect refrigerant leaks but, in the case of flammable refrigerants, the sensitivity may not be adequate, or may need re-calibration. (Detection equipment shall be calibrated in a refrigerant-free area.) Ensure that the detector is not a potential source of ignition and is suitable for the refrigerant used. Leak detection equipment shall be set at a percentage of the LFL of the refrigerant and shall be calibrated to the refrigerant employed, and the appropriate percentage of gas (25 % maximum) is confirmed. Leak detection fluids are suitable

for use with most refrigerants but the use of detergents containing chiarine shall be avoided as the chiarine may react with the refrigerant and corrode the copper pipe-work. If a leak is suspected, all naked flames shall be removed/extinguished. If a leakage of refrigerant is found which requires brazing, all of the refrigerant shall be recovered from the system, or isolated (by means of shut off valves) in a part of the system remote from the leak. For appliances containing flammable refrigerants, oxygen free nitrogen (OFN) shall then be purged through the system both before and during the brazing process.

- Removal and evacuation

  When breaking into the refrigerant circuit to make repairs or for any other purpose conventional procedures shall be used. However, for flammable refrigerants it is important that best practice is followed since flammability is a consideration.

  The following procedure shall be adhered to:
  - remove refrigerant;
  - purge the circuit with inert gas; evacuate;
  - purge again with inert gas;
  - open the circuit by cutting or brazing.

  The refrigerant charge shall be recovered into the correct recovery cylinders. For appliances containing flammable refrigerants, the system shall be flushed with OFN to render the unit safe. This process may need to be repeated several times. Compressed air or oxygen shall not be used for purging refrigerant systems. For appliances containing flammable refrigerants, flushing shall be achieved by breaking the vacuum in the system with OFN and continuing to fill until the working pressure is achieved, then venting to atmosphere, and finally pulling down to a vacuum. This process shall be repeated until no refrigerant is within the system. When the final OFN charge is used, the system shall be vented down to atmospheric pressure to enable work to take place. This operation is absolutely vital if brazing operations on the pipe-work are to take place. Ensure that the outlet for the vacuum pump is not close to any ignition sources and that ventilation is available.

- Charging procedures

  In addition to conventional charging procedures, the following requirements shall be followed.
  - Ensure that contamination of different refrigerants does not occur when using charging equipment. Hoses or lines shall be as short as possible to minimise the amount of refrigerant contained in them.
  - Cylinders shall be kept upright.
  - Ensure that the refrigeration system is earthed prior to charging the system with refrigerant.
  - Label the system when charging is complete (if not already).
  - Extreme care shall be taken not to overfill the refrigeration system.

  Prior to recharging the system, it shall be pressure-tested with the appropriate purging gas. The system shall be leak-tested on completion of charging but prior to commissioning. A follow up leak test shall be carried out prior to leaving the site.

- Decommissioning

  Before carrying out this procedure, it is essential that the technician is completely familiar with the equipment and all its detail. It is recommended good practice that all refrigerants are recovered safely. Prior to the task being carried out, an oil and refrigerant sample shall be taken in case analysis is required prior to re-use of reclaimed refrigerant. It is essential that electrical power is available before the task is commenced.

  1. Become familiar with the equipment and its operation.
  2. Isolate system electrically.
  3. Before attempting the procedure, ensure that:
     - mechanical handling equipment is available, if required, for handling refrigerant cylinders;
     - all personal protective equipment is available and being used correctly;
     - the recovery process is supervised at all times by a competent person;
     - recovery equipment and cylinders conform to the appropriate standards.
  4. Pump down refrigerant system, if possible.
  5. If a vacuum is not possible, make a manifold so that refrigerant can be removed from various parts of the system.
  6. Make sure that cylinder is situated on the scales before recovery takes place.
  7. Start the recovery machine and operate in accordance with manufacturer's instructions.
  8. Do not overfill cylinders. (No more than 80% volume liquid charge).
  9. Do not exceed the maximum working pressure of the cylinder, even temporarily.
  10. When the cylinders have been filled correctly and the process compieted, make sure that the cylinders and the equipment are removed from site promptly and all isolation valves on the equipment are closed off.
  11. Recovered refrigerant shall not be charged into another refrigeration system unless it has been cleaned and checked.

- Labelling
  Equipment shall be labelled stating that it has been de-commissioned and emptied of refrigerant. The label shall be dated and signed. For appliances containing flammable refrigerants, ensure that there are labels on the equipment stating the equipment contains flammable refrigerant.

- Recovery
  When removing refrigerant from a system, either for servicing or decommissioning, it is recommended good practice that all refrigerants are removed safely. When transferring refrigerant into cylinders, ensure that only appropriate refrigerant recovery cylinders are employed. Ensure that the correct number of cylinders for holding the total system charge are available. All cylinders to be used are designated for the recovered refrigerant and labelled for that refrigerant (i.e. special cylinders for the recovery of refrigerant). Cylinders shall be complete with pressure-relief valve and assodated shut-off valves in good working order. Empty recovery cylinders are evacuated and, if possible, cooled before recovery occurs. The recovery equipment shall be in good working order with a set of instructions concerning the equipment that is at hand and shall be suitable for the recovery of all appropriate refrigerants including, when applicable, flammable refrigerants. In addition, a set of calibrated weighing scales shall be available and in good working order. Hoses shall be complete with leak-free disconnect couplings and in good condition. Before using the recovery machine, check that it is in satisfactory working order, has been properly maintained and that any associated electrical components are sealed to prevent ignition in the event of a refrigerant release. Consult manufacturer if in doubt. The recovered refrigerant shall be returned to the refrigerant supplier in the correct recovery cylinder, and the relevant waste transfer note arranged. Do not mix refrigerants in recovery units and especially not in cylinders. If compressors or compressor oils are to be removed, ensure that they have been evacuated to an acceptable level to make certain that flammable refrigerant does not remain within the lubricant. The evacuation process shall be carried out prior to returning the compressor to the suppliers. Only electric heating to the compressor body shall be employed to accelerate this process. When oil is drained from a system, it shall be carried out safely.

improve your life

www.argoclima.com

Argoclima assumes no responsibility for any errors or inaccuracies in the content of this manual and reserves the right to make to this, at any time and without notice, any changes deemed appropriate for any technical or commercial need.