argo

improve your life

CE

EN

CLIMADESIGN MULTI

MULTI SPLIT AIR CONDITIONERS-R32



USER MANUAL and INSTALLATION GUIDE

INVERTER

INDOOR UNIT

CLIMADESIGN MULTI 9000 UI

CLIMADESIGN MULTI 12000 UI

OUTDOOR UNIT

CLIMADESIGN DUAL 14000 UE

CLIMADESIGN DUAL 18000 UE N

CLIMADESIGN TRIAL 21000 UE

Please read this manual carefully before installing and using the air conditioner, and retain for future reference.

V 10/25

INDEX

General warnings 33

Safety precautions 34

Notices for usage 36

Description of parts 37

Remote control guide 38

WiFi guide 43

Cleaning and care 44

Troubleshooting 45

Notices for the installation 46

Indoor unit installation 50

Outdoor unit installation 52

Maintenance notes 56

Warnings for the refrigeration system specialist 57

REQUIREMENTS FOR INSTALLATION AND MAINTENANCE PERSONNEL

All personnel who carry out installation and/or maintenance operations on the units must be equipped with PEF (European Refrigerators License) as required by the D.P.R. n. 146/2018 implementing Regulation (EU) no. 573/2024. If another technician is required to maintain and repair the equipment, this will need to be supervised by the person who is qualified to use flammable refrigerants. The repair must be performed according to the methodology indicated by the manufacturer of the equipment. If you need to install, move or service the air conditioner, please contact your dealer or local service center for the procedure first. The air conditioner must be installed, moved or maintained by authorized personnel. Failure to do so could result in serious damage, personal injury or death.

GENERAL WARNINGS



Appliance filled with flammable gas R32.



Before using the appliance, read the owner's manual.

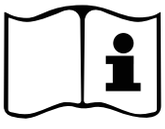

Before installing the appliance, read the installation manual.



Before repairing the appliance, read the service manual.

THE REFRIGERANT R32

- To realize the function of the air conditioner unit, a special refrigerant circulates in the system. The refrigerant is the fluoride R32 = GWP (Global warming potential). This refrigerant is flammable and inodorous. It can lead to explosions under certain conditions, however the flammability of this refrigerant is very low and it can be ignited only by fire.
- Compared to other common refrigerants, R32 is a non-polluting refrigerant with no harm to the ozonosphere and a lower effect upon the greenhouse effect. R32 has very good thermodynamic features which lead to a really high energy efficiency. The units therefore need less filling.

Warning:
Do not try to accelerate the defrosting process or to clean the appliance in different ways other than those recommended by the manufacturer.
Should repair be necessary, contact your nearest authorized Argoclima Service Centre.
Any repairs carried out by unqualified personnel may be dangerous.
The appliance has to be stored in a room that doesn't have any continuously operating ignition sources (for example: open flames, an operating gas appliance or an operating electric heater.)
Do not pierce or burn. Appliance has to be installed, operated and stored in a room with a floor area larger than X m^2 (Please refer to table "a" in section of " Safety Operation of Inflammable Refrigerant" for Space X.)
For repairs, strictly follow manufacturer's instructions only for appliances filled with R32 flammable gas.
Be aware that refrigerants do not have any odour.





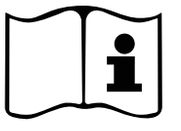



SAFETY PRECAUTIONS

⚠ WARNING

- This appliance can be used by children aged from 8 years and above and persons with reduced physical, sensory or mental capabilities or lack of experience and knowledge if they have been given supervision or instruction concerning use of the appliance in a safe way and understand the hazards involved. Children shall not play with the appliance. Cleaning and user maintenance shall not be made by children without supervision.
- The air conditioner must be grounded. Incomplete grounding may result in electric shocks. Do not connect the earth wire to the gas pipeline, water pipeline, lightning rod, or telephone earth wire.
- Always switch off the device and cut the power supply when the unit is notin use for long time so as to ensure safety.
- Take care not let the remote control and the indoor unit watered or being too wet. Otherwise, it may cause short circuit.
- If the supply cord is damaged, it must be replaced by the manufacturer, its service agent or similarly qualified persons in order to avoid a hazard.
- Don't cut off main power switch during operating or with wet hands. It may cause electric shock.
- Don't share the socket with other electric appliance. Otherwise, it may cause electric shock even fire and explosion.
- Always switch off the device and cut the power supply before performing any maintenance or cleaning. Otherwise, it may cause electric shock or damage.
- Don't pull the power cable. The damage of pulling power cord will cause serious electric shock.
- A warning that ducts connected to an appliance shall not contain an ignition source.
- Don't install air conditioner in a place where there is flammable gas or liquid. The distance between them should above 1 m. It may cause fire even explosion.
- Don't use liquid or corrosive cleaning agent wipe the air conditioner and sprinkle water or other liquid either.
- Don't attempt to repair the air conditioner by yourself. Incorrect repairs may cause fire or explosion. Contact a qualified service technician for all service requirement.
- Don't use air conditioner in lightning storm weather. Power supply should

be cut in time to prevent the occurrence of danger.

- Don't put hands or any objects into the air inlets or outlets. This may cause personal injury or damage to the unit.
- Please note whether the installed stand is firm enough or not. If it is damaged, it may lead to the fall of the unit and cause the injury.
- Don't block air inlet or air outlet. Otherwise, the cooling or heating capacity will be weakened, even cause system stop operating.
- Don't let the air conditioner blow against the heater appliance. Otherwise it will lead to incomplete combustion, thus causing poisoning.
- The appliance shall be installed in accordance with national wiring regulations. An earth leakage breaker with rated capacity must be installed to avoid possible electric shocks.
- Don't open the windows and doors for long time when the air conditioner is running. Otherwise, the cooling or heating capacity will be weakened.
- Don't stand on the top of the outdoor unit or place heavy things on it. This cloud cause personal injuries or damage the unit.
- Don't use the air conditioner for other purposes, such as drying clothes, preserving foods, etc.
- Don't apply the cold air to the body for a long time. It will deteriorate your physical conditions and cause health problems.
- Set the suitable temperature. It is recommended that the temperature difference between indoor and outdoor temperature should not be too large. Appropriate adjustments of the setting temperature can prevent the waste of electricity.
- If your air conditioner is not fitted with a supply cord and a plug, an anti-explosion all-pole switch must be installed in the fixed wiring and the distance between contacts should be no less than 3.0 mm.

Fuse Type: T3.15AH250V, the electricity passing through the fuse cannot be higher than 3.15A. For the air conditioner permanently connected to an outlet, equip the line with a power switch. The current switch must be single-pole, with a distance between the contacts greater than 3 mm and a residual nominal value not greater than 30 mA. The power supply circuit must have a leakage protection device and an air switch whose rated capacity should be greater than 1.5 times the maximum current.

INFORMATION FOR CORRECT DISPOSAL OF THE PRODUCT IN ACCORDANCE WITH THE EUROPEAN DIRECTIVE 2012/19/EU

At the end of its working life this equipment must not be disposed of as an household waste. It must be taken to special local community waste collection centres or to a dealer providing this service. Disposing of electrical and electronic equipment separately avoids possible negative effects on the environment and human health deriving from an inappropriate disposal and enables its components to be recovered and recycled to obtain significant savings in energy and resources. In order to underline the duty to dispose of this equipment separately, the product is marked with a crossed-out dustbin

NOTICES FOR USAGE

OPERATING RANGE

Cooling mode: from -10 °C to +52 °C (outdoor temperature)
Heating mode: from -15 °C to +24 °C (outdoor temperature)

- When the temperature is too high, the air conditioner may activate the automatic protection device, so that the air conditioner could be shut down.
- When the temperature is too low, the heat exchanger of the air conditioner may freeze, leading to water dripping or other malfunction.
- In long-term cooling or dehumidification with a relative humidity of above 80% (doors and windows are open), there may be water condenses or dripping near the air outlet.

NOTES FOR HEATING FUNCTION

- When the heating function is started, the indoor unit fan will not work immediately to avoid the introduction of insufficiently hot air into the environment.
- When the outdoor temperature is very low and the humidity is high, ice may form on the heat exchanger of the outdoor unit. Then the air conditioner will start defrost function.
- During defrost, the air conditioner will stop heating for about 5-12 minutes.
- Vapor may come out from the outdoor unit during defrost. This is not a malfunction, but a result of fast defrost.
- Heating will resume after defrost is complete.

NOTES FOR TURNING OFF

- When the air conditioner is turned off, the unit may continue to ventilate for a few minutes to help dry the battery of the indoor unit.

EMERGENCY OPERATION

- If the remote control is faulty, use the emergency button located under the front panel of the indoor unit (see image).
- If this button is pushed with the unit OFF, the air conditioner will operate in Auto mode.
- If this button is pushed with the unit ON, the air conditioner will stop running.

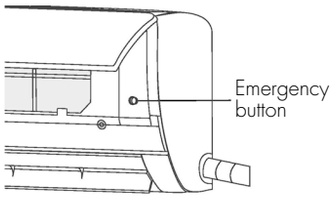

AIRFLOW DIRECTION ADJUSTMENT

1. Use the vertical oscillation button on the remote control to set the direction of the air flow.
2. It is possible to direct the air flow also horizontally; this operation is only possible manually, by moving the air delivery flaps as desired (see image).

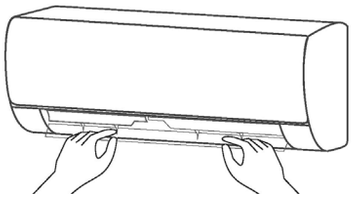

Note: move the air flaps before the unit is in operation, or your finger might be injured.

Never place your hand into the air inlet or outlet when the air conditioner is in operation.

DESCRIPTION OF PARTS

INDOOR UNIT

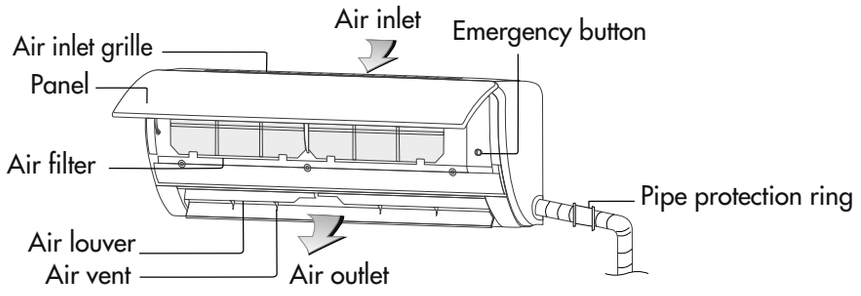

OUTDOOR UNIT

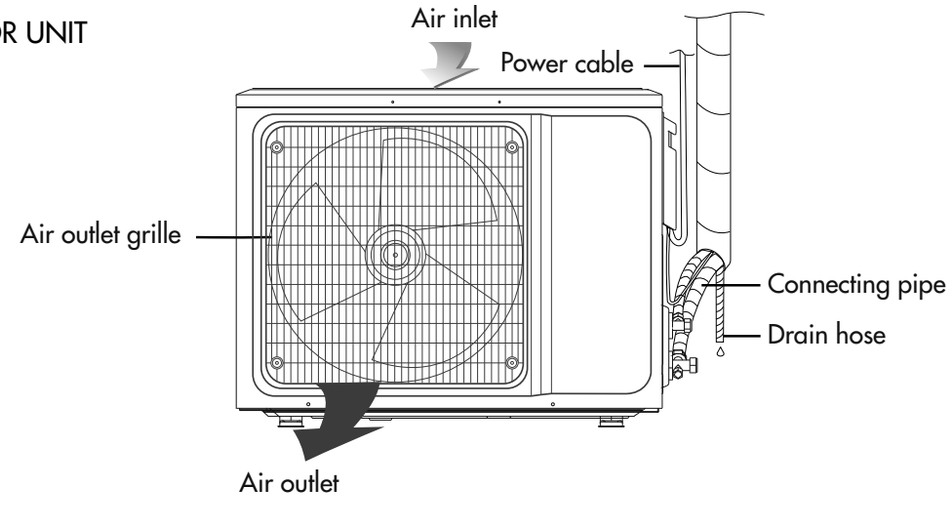

Note: all the illustrations in this manual are for explanation purpose only. Your air conditioner may be slightly different. The actual shape shall prevail.

REMOTE CONTROL USER GUIDE

When using the remote control for the first time, install the batteries making sure to correctly position the two polarities "+" and "-". To insert the batteries, follow the instructions below:

- Open the battery compartment by sliding the door outwards (see the direction of the arrow in fig.1).
- Insert two new batteries, paying attention to the polarity (fig.2).
- Reinsert the cover into the battery compartment (see the direction of the arrow in fig.3).

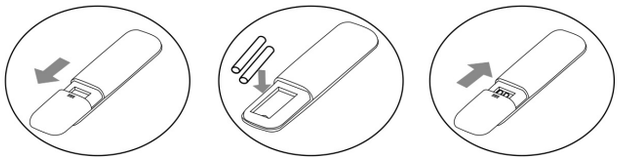

Fig.1 Fig.2 Fig.3

- Always point the remote control at the air conditioner receiver; it must be within 8 meters of the receiver and there must be no obstacle between the remote control and the unit's signal receiver.
- Do not throw or drop the remote control on the ground, avoid infiltration of water or other liquids and do not expose it to bad weather, direct contact with the sun or other heat sources.
- In the event of a malfunction, or if the display tends to disappear or reset, remove the batteries from the remote control for 30 seconds, then insert them again. If it still doesn't work, replace them.
- If you replace the batteries, do not mix new ones with old ones or with other types of batteries, this could cause the remote control to malfunction.
- In case of prolonged inactivity, remove the batteries to avoid potential leaks.
- Batteries must be correctly disposed of according to current regulations.



INFORMATION FOR THE CORRECT DISPOSAL OF BATTERIES COMPLIANT WITH REGULATION (EU) 2023/1542

Replace batteries when they are depleted. At the end of their life, batteries must be disposed of separately from unsorted waste. They must be taken to designated recycling centres or returned to a retailer providing this service. Separate disposal of batteries helps to reduce the potential harmful effects on the environment and human health caused by their improper disposal and also enables the recovery and recycling of component materials, saving significant energy and resources. The requirement for separate disposal is indicated by the crossed-out wheelie bin label affixed to the appliance. Illegal disposal of the product by the user is subject to administrative penalties as per current regulations.

BUTTONS DESCRIPTION

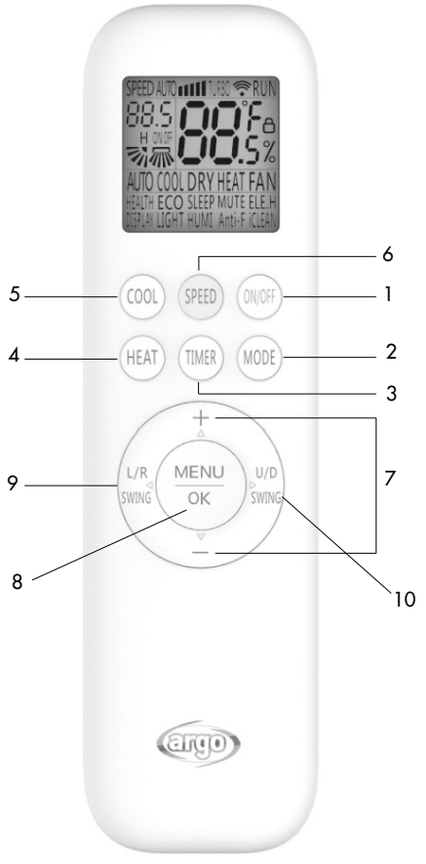

1. ON/OFF button
   Press this button to turn the unit on or off. This button can also be used to reset the timer and the SLEEP function.

2. MODE button
   Press this button to select the operating mode: AUTO (automatic) - COOL (cooling) - DRY (dehumidification) - HEAT (heating) - FAN (ventilation), according to the sequence below:

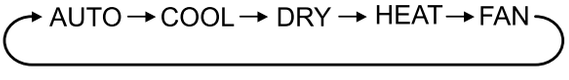

3. TIMER button
   With the air conditioning on, press this button to deactivate the TIMER function, with the air conditioning off to activate it. When the button is pressed, the display will show the words "ON (OFF)" flashing. Press the "+" and "-" buttons to set the timer, with each press the selection interval will increase or decrease by 0.5 h. The range that can be set is 0.5-24 h. Press the "TIMER" button again to activate the function, the "ON (OFF)" symbol will stop flashing. If the "TIMER" button is not pressed within 10 seconds while the "ON (OFF)" symbol is flashing on the display, the TIMER function will be cancelled. If the TIMER function is active, pressing this button will deactivate it.

4. HEAT button
   Press this button to activate the heating mode.

5. COOL button
   Press this button to activate the cooling mode.

6. SPEED button
   With the unit turned on and in COOL or HEAT mode, press this button to select the fan speed, according to the sequence below:

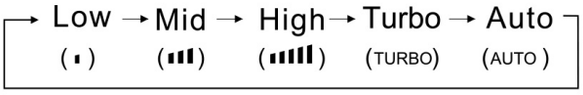

In FAN (ventilation) mode it is possible to select the ventilation speed between Low - Mid - High, but it is not possible to set the Turbo speed.
In AUTO mode (automatic) it'spossible to select the fan speed and set the Turbo speed.
In DRY (dehumidification) mode it is not possible to select the ventilation speed.

1. + - buttons
   Press the + or - buttons to set the desired room temperature from 16 °C to 32 °C; the display shows the time and will change each time the button is pressed. Each time you press "+" the temperature will increase by 1°C and each time you press "-" the temperature will decrease by 1°C.
   Note: Temperature cannot be set in AUTO and FAN mode.

2. MENU / OK button
   Press the Menu button to select available functions and display them on the remote control. The remote control display shows the indications HEALTH, ECO, SLEEP, SILENCE, DISPLAY, LIGHT, IFEEL.
   Use the + - buttons, or the L/R SWING or U/D SWING buttons to activate the desired function within the Menu. After selecting the desired function, press OK to confirm your selection. Each time the + - or L/R SWING - U/D SWING buttons are pressed, the icon corresponding to the selected function will light up on the display.

3. L/R SWING BUTTON horizontal swing (NOT AVAILABLE)
   Shortly press this button to activate the horizontal oscillation of the air delivery flaps. Press this button again to deactivate the function. Press and hold the button for 3 seconds and press again to fix the flap position.

4. U/D SWING vertical swing
   Shortly press this button to activate the vertical oscillation of the air delivery flaps. Press this button again to deactivate the function.
   With the unit turned on, hold down for 3 seconds and then press the button again to set the fixed oscillation angle between the 5 possible positions (the fifth position corresponds to Quiet). To deactivate this function, press and hold this button for 3 seconds.

Functions that can be activated from the Menu button

HEALTH function
Function not available.

ECO function
With the unit turned on, press the Menu button and using the + or - and U/D SWING or L/R SWING buttons select the ECO function, pressing OK on the corresponding indication shown on the display. To deactivate this function, again using the Menu button and the selection buttons, press OK on the ECO indication, which will turn off. In COOL mode, the unit will activate ECO mode which operates with the lowest electricity consumption and which automatically turns off after 8 hours. In COOL mode the frequency reduction is linked to the gap between the room temperature and the set temperature. If you change the mode or turn off the remote control, the ECO function will automatically be deactivated.

SLEEP function
With the unit turned on, press the Menu button and using the + - and U/D SWING or L/R SWING buttons select the SLEEP function, pressing OK on the corresponding indication shown on the display. To deactivate this function, again using the Menu button and the selection buttons, press OK on the SLEEP indication, which will go off.
By pressing the SLEEP button, the display turns off.
After setting the Sleep mode, in the cooling function, the temperature will increase by 1 °C in one hour, then it will automatically increase by 1 °C again after another hour. After setting the Sleep mode, in the heating function, the temperature will decrease by 2 °C after one hour, then it will automatically decrease by 2 °C again after another hour. The fan speed will automatically switch to the lowest level available to guarantee maximum silent operation during night sleep. After 10 hours of operation in Sleep mode the air conditioner returns to its previous functions and turns off automatically. This mode cannot be activated in fan and Auto modes.

SILENCE function
With the unit turned on, press the Menu button and using the + - and U/D SWING or L/R SWING buttons select the SILENCE function, pressing OK on the corresponding indication shown on the display. To deactivate this function, again using the Menu button and the selection buttons, press OK on the SILENCE indication, which will go off. This feature allows you to reduce the sound level of the unit for quieter operation. This way the lowest possible sound level is achieved.

ELE.H function (NOT AVAILABLE)
With the unit turned on, press the Menu button and using the + - and U/D SWING or L/R SWING buttons select the ELE.H function, pressing OK on the corresponding indication shown on the display. To deactivate this function, again using the Menu button and the selection buttons, press OK on the ELE.H indication, which will turn off. This function allows you to activate the auxiliary heating.
The unit will then activate the auxiliary heating function based on the temperature detected in the room, to speed up heating and reach the desired temperature more quickly.

DISPLAY function
With the unit turned on, press the Menu button and using the + - and U/D SWING or L/R SWING buttons select the DISPLAY function, pressing OK on the corresponding indication shown on the display. By subsequently pressing the button, the display on the indoor unit turns off or on.
To deactivate this function, again using the Menu button and the selection buttons, press OK on the DISPLAY indication, which will turn off. This function is used to activate or deactivate the display lighting on the indoor unit.

LIGHT function
Function not available.

iCLEAN function
With the unit turned off, press the Menu button using the + - and U/D SWING or L/R SWING buttons to select the iCLEAN function, pressing OK on the corresponding indication shown on the display. The single CL appears on the indoor unit display. To deactivate this function, again using the Menu button and the selection buttons, press OK on the iCLEAN indication, which will turn off.
iCLEAN designed for thorough and effective cleaning of the evaporator which consists of 4 phases plus sterilization at 57 °C. Evaporator cleaning can be activated when desired.
The function will see phases of condensation, ice formation, defrosting and drying take place in sequence aimed at eliminating all residues of dust and pollutants and all traces of condensation: a fifth phase of sterilization will follow in which the evaporating unit will be kept for at least 10 minutes at a temperature of 57 °C. This will allow clean air to be introduced into the room at all times and to preserve the efficiency of the heat exchanger

I-FEEL function
With the unit turned on, press the Menu button and using the + - and U/D SWING or L/R SWING buttons select the I-FEEL function, pressing OK on the I-FEEL indication will show the icon on the display. To deactivate this function, again using the Menu button and the selection buttons, press OK on the I-FEEL indication, which will turn off. Once this function is set, the remote control sends the detected room temperature to the indoor unit every 10 minutes, which will then adjust its operation automatically according to the difference between temperatures detected and set temperature. Place the remote control near you when setting this function.
Do not place the remote control near high or low temperature objects to avoid detecting inaccurate room temperature.

Anti-F function
With the unit turned off, press the Menu button and use the + - and U/D SWING or L/R SWING buttons to select the Anti-F function, pressing OK on the corresponding indication shown on the remote control display. To deactivate this function, again using the Menu button and the selection buttons, press OK on the Anti-F indication, which will go off.
This air conditioner has a special drying and anti-mold function. Activate this function before turning off the unit to ensure that the air conditioner, after operating in cooling, dehumidification or Auto mode, continues to ventilate for three minutes at low speed before stopping. The purpose of this function is to perfectly dry the evaporator of the internal unit and prevent the formation of mold and bacteria.

Functions that can be activated by key combination

CHILD LOCK function
Press the HEAT and MODE buttons on the remote control simultaneously for 3 seconds to activate or deactivate the button lock on the remote control. The icon will appear on the remote control display

°C/°F function
The temperature is shown by default in °C. To switch to °F display, press the COOL and HEAT buttons simultaneously for 3 seconds.
Note: When the temperature is set on the remote control, it will be shown on the indoor unit display.

8°C heating function

With the unit turned on, press the MODE and + buttons for 3 seconds to activate this function. Compressor and fans operate at very low speed to maintain a minimum temperature of 8°C in the room with very low consumption.

OPERATION MODE

Automatic mode (AUTO)

- Press the "MODE" button, select the automatic operation mode.
- By pressing the "SPEED" button, you can select the fan speed from LOW, MID, HIGH, AUTO.
- Press the "ON/OFF" button, the air-conditioner starts to operate.
- Press the "ON/OFF" button again, the air-conditioner stops.
  COOLING mode: The default set temperature is 20 °C. When the ambient temperature exceeds 20 °C the unit starts to operate in cooling. Below 20 °C it only works in ventilation.
  HEATING mode: The default set temperature is 25 °C. When in room the temperature is below 25 °C the unit starts working in heating.

COOLING/HEATING mode

- Press the "MODE" button, select the Cooling or Heating operation mode.
- By pressing the "+" or "-" you can set the temperature from 16 °C to 32 °C, the display changes as you touch the button.
- By pressing the "SPEED" button, you can select the fan speed from LOW, MID, HIGH, TURBO, AUTO.
- Press the "ON/OFF" button, the air-conditioner starts to operate.
- Press the "ON/OFF" button again, the air-conditioner stops.

FAN mode

- Press the "MODE" button, select the fan operation mode.
- By pressing the "SPEED" button, you can select the fan speed from LOW, MID, HIGH.
- Press the "ON/OFF " button, the air-conditioner starts to operate in FAN mode.
- Press the "ON/OFF" button again, the air-conditioner stops.

DRY mode

- Press the "MODE" button, select the drying operation mode.
- By pressing the "+" or "-" you can set the temperature, the display changes as you touch the button.
- In DRY mode it's not possible to select fan speed.
- Press the "ON/OFF" button, the air-conditioner starts to operate.
- Press the "ON/OFF" button again, the air-conditioner stops.

WIFI GUIDE

INTRODUCTION

The air conditioner is equipped with remote control technology, with a Wi-Fi module inside the appliance connected to the display and the air conditioner control. The air conditioner must be in constant connection with a wireless router or access point connected to the internet. Mobile devices such as smartphones and tablets, on which dedicated applications are installed and Wi-Fi modules subsequently configured, can be used as remote controls once connected to the internet.

DOWNLOAD AND INSTALL THE CONTROL SOFTWARE

The control software can be downloaded and installed as follows.

1. For mobile devices such as smartphones and tablets, search and download "SmartLife" from Google Play or App store and install it.
2. You can also scan the "QR code" below, which will automatically direct you to the download interface for installing the software.
3. Follow the instructions on the App step by step.

RESET OF THE WI-FI MODULE

With the unit turned on, press the COOL and + buttons simultaneously for 3 seconds, 8 sound signals will be heard, then an interval of 2 seconds and a double sound signal will be heard to confirm that the reset has occurred correctly. If the reset does not occur correctly, repeat the operation.

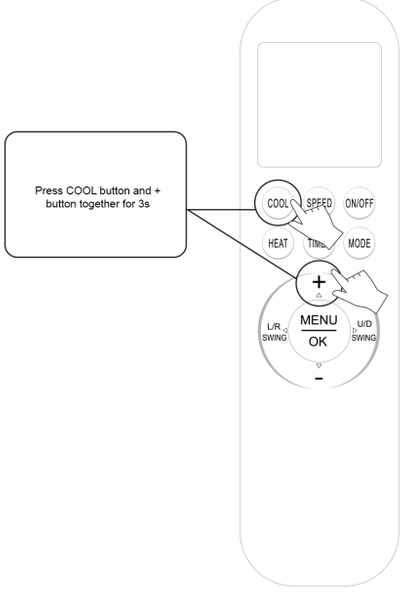

CONNECTING THE INDOOR UNIT TO THE SMART LIFE APP

Once logged in, you can add the unit by scanning the QR code below from the Smart Life app:

CLEAN AND CARE

WARNING

- Before the cleaning of the air conditioner, it must be shut down and the electricity must be cut off for more than 5 minutes, otherwise there might be the risk of electric shocks.
- Do not wet the air conditioner, which can cause an electric shock. Make sure not to rinse the air conditioner with water under any circumstances.
- Volatile liquids such as thinner or gasoline will damage the air conditioner housing, therefore please clean the housing of air conditioner only with soft dry cloth and damp cloth moistened with neutral detergent.
- In the course of the usage, pay attention to cleaning the filter regularly, to prevent the accumulation of dust which may affect the air conditioner performance. If the service environment of the air conditioner is dusty, correspondingly increase the number of times of cleaning. After removing the filter, do not touch the fin part of the indoor unit with the finger, and no force to damage the refrigerant pipeline.

CLEAN THE PANEL

Clean the front panel of the indoor unit with a cloth and lukewarm water, below 40 °C. Do not disassemble the panel for cleaning.

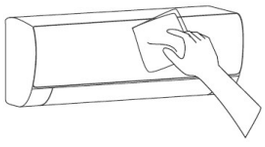

CLEAN THE AIR FILTER

Remove the air filter

Use both hands to open the panel for an angle from both ends of the panel in accordance with the direction of the arrow. Release the air filter from the slot and remove it.

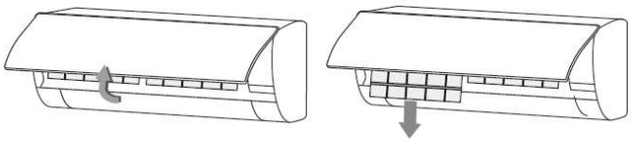

Clean the air filter

Use a vacuum cleaner or water to rinse the filter, and if the filter is very dirty (for example, with greasy dirt), clean it with warm water (below 45 °C) with mild detergent, and then put the filter in the shade to dry in the air.

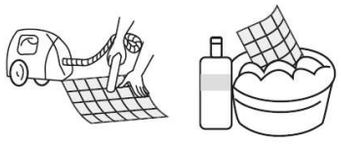

Mount the air filter

Reinstall the dried filter in reverse order of removal, then cover and lock the panel.

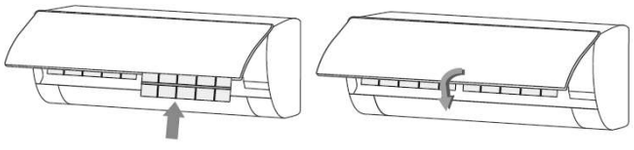

CHECK BEFORE USING

1. Check whether all the air inlets and outlets of the units are unblocked.
2. Check whether there is blocking in the water outlet of the drain pipe, and immediately clean it up if any.
3. Check the ground wire is reliably grounded.
4. Check whether the remote control batteries are installed, and whether the power is sufficient.
5. Check whether there is damage in the mounting bracket of the outdoor unit, and if any, please contact our local service center.

MAINTENANCE AFTER USING

1. Cut off the power source of the air conditioner, turn off the main power switch and remove the batteries from the remote controller.
2. Clean the filter and the unit body.
3. Remove the dust and debris from the outdoor unit.
4. Check whether there is damage in the mounting bracket of the outdoor unit, and if any, please contact our local service center.

TROUBLESHOOTING

WARNING

Do not repair the air conditioner by yourself as wrong maintenance may cause electric shock or fire or explode, please contact the authorized service center and let the professionals conduct the maintenance, and checking the following items prior to contacting for maintenance can save your time and money.

Phenomenon	Causes	Troubleshooting
The air conditioner does not work	• There might be power outages. • Power plug may be loose out from the socket. • Power switch fuse may blow. • The time for timing boot is yet to come.	• Wait until power is restored. • The plug in the plug tightly. • Replace the fuse. • Wait or cancel the timer settings.
The air conditioner does not start after stopping it	• The air conditioner does not start immediately due to the protection device	• Wait at least 5 minutes and try again.
The air conditioner stops running after it starts up for a while	• May have reached the setting temperature. • May be at a defrosting state. • Shutdown Timer may be set.	• It is a normal function phenomenon. • It will automatically restore and run again after defrosting. • If you continue to use, please turn it on again.
The wind blows out, but the cooling/heating effect is not good	• Excessive accumulation of dust on filter, blocking at air inlet and outlet, and the excessively small angle of the louver blades all will affect the cooling and heating effect. • Poor cooling and heating effect caused by doors and windows opening, and unclosed exhaust fan. • Mode setting is incorrect, and the temperature and wind speed settings are not appropriate.	• Please clean the filter, remove the obstacles at the air inlet and outlet and regulate the angle of the louver blades. • Please close the doors, windows, the exhaust fan, etc. • Please re-select the mode, and set the appropriate temperature and wind speed.
The indoor unit blows out odor	• The air conditioner itself does not have undesirable odor. If there is odor, it may be due to accumulation of the odor in the environment.	• Clean the air filter or activate the cleaning function.
There is sound of running water during the running of air conditioner	• When the air conditioner is started up or stopped, or the compressor is started up or stopped during the running, sometimes the “hissing” sound of running water can be heard.	• This is the sound of the flow of the refrigerant, not a malfunction.
A slight “click” soundis heard at the of start-up or shut-down	• Due to temperature changes, panel and other parts will swell, causing the sound of friction.	• This is normal, not a fault.
The indoor unit makes abnormal sound	• The sound of fan or compressor relay switched on or off. When the defrosting is started or stop running, it will create sound. • Too much dust accumulation on the air filter of the indoor unit may result in fluctuation of the sound. • Too much air noise when “Strong wind” is turned on.	• That is due to the refrigerant flows to reverse direction. They are not malfunctions. • Clean the air filters in time. • This is normal, if feeling uncomfortable, please deactivate the “strong wind” function.
There are water drops over the surface of the indoor unit	• When ambient humidity is high, water drops will be accumulated around the air outlet or the panel, etc. • Prolonged cooling run in open space produces water drops. • Too small opening angle of the louver blades may also result in water drops at the air inlet.	• This is a normal physics phenomenon. • Close the doors and windows. • Increase the angle of the louver blades.
During the cooling operation, the indoor unit outlet sometimes will blow out mist.	• When the indoor temperature and humidity are high, it happens sometimes.	• This is because the indoor air is cooled rapidly. After it runs for some time, the indoor temperature and humidity will be reduced and the mist will disappear.

⚠ WARNING

Immediately stop operation of the appliance, disconnect the electricity and contact the nearest Technical Assistance Centre in the following cases:

- Hear any harsh sound or smell any awful odor during running.
- Abnormal heating of power cable and plug occurs.
- The unit or remote controller has any impurity or water.
- Air switch or leakage protection switch is often disconnected.

NOTICES FOR INSTALLATION

SAFETY OPERATION OF FLAMMABLE REFRIGERANT

Qualification requirement for installation and maintenance

- All workers who engage with the refrigeration system should bear the valid certification awarded by the authoritative organization, and the qualification recognized by the industry for dealing with the refrigeration system.
- The refrigeration system can only be repaired following the methods suggested by the equipment's manufacturer.

Installation notes

- The air conditioner mustn't be used in a room that has running fire or heat sources (such as, working coal gas ware, operating heater).
- Do not drill holes in the circuit or burn the connection pipe.
- The air conditioner must be installed in a room that is larger than the minimum room area. The minimum room area is shown on the following "table a".
- Leak test is mandatory after installation.

TABLE A - Minimum room area (m^2)

Minimum room area (m^2)	Charge amount (kg)	≤1.2	1.3	1.4	1.5	1.6	1.7	1.8	1.9	2	2.1	2.2	2.3	2.4	2.5
	Floor location	/	14.5	16.6	19.3	22	24.8	27.8	31	34.3	37.8	41.5	45.4	49.4	53.6
	Window mounted	/	5.2	6.1	7	7.9	8.9	10	11.2	12.4	13.6	15	16.3	17.8	19.3
	Wall mounted	/	1.6	1.9	2.1	2.4	2.8	3.1	3.4	3.8	4.2	4.6	5	5.5	6
	Ceiling mounted	/	1.1	1.3	1.4	1.6	1.8	2.1	2.3	2.6	2.8	3.1	3.4	3.7	4

Maintenance notes

- Check whether the maintenance area or the room area meet the requirement of "table a" the unit is only allowed to be operated in rooms that meet these requirements.
- Check whether the maintenance area is well-ventilated. The continuous ventilation status should be kept during the entire operation process.
- Check whether there is a fire source or potential fire source in the maintenance area. Running fire is prohibited in the maintenance area and the "no smoking" sign should be hanged.
- Check whether the warning sign is in good condition, otherwise replace it.

Welding

- If it is necessary to cut or weld the refrigerant system pipes in the maintenance procedures, please follow the steps here below:
  - Shut down the unit and cut power supply
  - Eliminate the refrigerant
  - Vacuum with a vacuum machine
  - Clean the pipes with the N2 gas
  - Cut and weld or
  - Bring the unit to a service centre for welding
- The refrigerant should be recycled in a specialized storage tank.
- Make sure there aren't any free flames near the outlet of the vacuum pump and that it's well-ventilated.

Filling the refrigerator circuit

- Use refrigerant filling appliances specialized for R32. Make sure that different kinds of refrigerant don't contaminate one another.
- The refrigerant tank should be kept upright when filling with the refrigerant.
- Stick the label on the system after filling is finished.
- Don't overfill.
- After filling is finished, please test the unit for leakage detection before the operation test; another test for leakage detection should be carried out when the refrigerant is removed.

Safety instructions for transportation and storage

- Please use a flammable gas detector to check before unloading and opening the container.
- No fire source and no-smoking.
- According to the local rules and laws.
- Before installating, please contact with local authorized maintenance center, if unit is not installed by the authorized maintenance center, the malfunction may not solved due to discommodious contact.
- The air conditioner must be installed by professionals according to the national wiring rules and this manual.
- Refrigerant leak test must be made after installation.
- To move and install air conditioner to another place, please contact our local special service center.

SAFETY PRINCIPLES FOR INSTALLATION

- Fire prevention device shall be prepared before installation.
- Keep installing site ventilated (open the door and window)
- Ignition source, fire, smoking and mobile phones are not allowed to exist in area where R32 refrigerant located.
- Keep leak detector in working state during the installation.
- If R32 refrigerant leakage occurs during the installation, you shall immediately detect the concentration in indoor environment until it reaches a safe level. If refrigerant leakage affects the performance of the air conditioner, please immediately stop the operation, and the air conditioner must be vacuumed firstly and be returned to the maintenance station for processing.
- Keep electric appliance, power switch, plug, socket, high temperature heat source and high static away from the area underneath sidelines of the indoor unit.
- The air conditioner shall be installed in an accessible location to installation and maintenance, without obstacles that may block air inlets or outlets of indoor/outdoor units, and shall keep away from heat source, inflammable or explosive conditions.
- When installing or repairing the air conditioner and the connecting line is not long enough, the entire connecting line shall be replaced with the connecting line of the original specification; extension is not allowed.
- Use new connection pipe, unless re-flaring the pipe.

REQUIREMENTS FOR INSTALLATION

- Avoid places of inflammable or explosive gas leakage or where there are strongly aggressive gases.
- Avoid places subject to strong artificial electric/magnetic fields.
- Avoid places subject to noise and resonance.



- Avoid severe natural conditions (e.g. heavy lampblack, strong sandy wind, direct sunshine or high temperature heat sources).
- Avoid places within the reach of children.
- Shorten the connection between the indoor and outdoor units.
- Select where it is easy to perform service and repair and where the ventilation good.
- The outdoor unit shall not be installed in any way that could occupy an aisle, stairway, exit, fire escape, catwalk or any other public area.
- The outdoor unit shall be installed as far as possible from the doors and windows of the neighbors as well as the green plants.

INSTALLATION ENVIRONMENT INSPECTION

- Check nameplate of outdoor unit to make sure whether the refrigerant is R32.
- Check the floor space of the room. The space shall not be less than usable space(5 m^2) in the specification. The

outdoor unit shall be installed at a well-ventilated place.
- Check the surrounding environment of installation site: R32 shall not be installed in the enclosed reserved space of a building.
- When using electric drill to make holes in the wall, check first whether there is pre-buried pipeline for water, electricity and gas. It is suggested to use the reserved hole in the roof of the wall.

REQUIREMENTS OF WALL INSTALLATION PLATE

- The wall installation plate must meet the relevant national or industrial standards in terms of strength with welding and connection areas rustproofed.
- The wall installation plate and its load carry surface shall be able to withstand 4 times or above the weight of the unit, or 200 kg, whichever is heavier.
- The wall installation plate of the outdoor unit shall be fastened with expansion bolt.
- Ensure the secure installation regardless of what type of wall on which it is installed, to prevent potential dropping that could hurt people.

ELECTRICAL SAFETY REQUIREMENTS

- Be sure to use the rated voltage and air conditioners dedicated circuit for the power supply, and the power cable diameter must meet the national requirements.
- When the maximum current of air conditioner is ≥16A, it must use the air switch or leakage protection switch equipped with protection devices.
- The operating range is 90%-110% of the local rated voltage. But insufficient power supply malfunction, electrical shock, or fire. If the voltage instability, proposed to increase the voltage regulator.
- The minimum clearance between the air conditioner and the combustibles is 1.5 m.
- The interconnection cord connect the indoor and outdoor units. You must first choose the right cable size before preparing it for connection.
- Cable Types:
  - Outdoor Power Cable: H07RN-F or H05RN-F;
  - Interconnection cord: H07RN-F or H05RN-F;
- Minimum Cross-Sectional Area of Power cable and interconnection cord:
- The size of the interconnection cord, power cable, fuse, and switch needed is determined by the maximum current of the unit. The maximum current is indicated on the nameplate located on the side panel of the unit. Refer to this nameplate to choose the right cable, fuse, or switch.
- **Note**: core number of cable refer to the detailed wiring diagram adhered on the unit which you purchased.

INSTALLATION WARNINGS

- WARNING: Make sure that the power supply is disconnected before carrying out any work on the unit.
- WARNING: Wear appropriate personal protective equipment before carrying out any work on the unit.
- WARNING: The appliance must be reinstalled in accordance with national system regulations.
- WARNING: Wiring and installation must only be performed by a qualified technician trained to install, modify,n extend and service the unit and perform safety and functionality tests.
- WARNING: Install a device, master switch or electric plug that will allow all the power from the appliance to be switched off.
- The following information is essential for correct unit installation. However, the installer should use his or her experience to install the unit according to specific requirements.
- Do not install the unit in locations where there are flammable gases or acid or alkaline substances that may irreparably damage the copper-aluminium heat exchangers or internal plastic components.
- Do not install the unit in offices or kitchens where oil vapours mixed with treated air may settle on the exchange coils, reducing performance, or on the unit's internal parts, damaging the plastic components.
- ATTENTION: For the connection between the units, use only annealed and deoxidized copper pipe for conditioning and refrigeration and insulated with expanded polyethylene of min. 8 mm.

ELECTRICAL CONNECTION REQUIREMENTS

- Electrical safety standards must be met when installing the unit.
- Use a power supply circuit and circuit breaker that comply with local safety regulations.

- Make sure that the power supply matches the requirements of the air conditioner. An unstable power supply or incorrect wiring may result in a fault. Install suitable power cables before switching on the air conditioner.
- Correctly connect the live, neutral and earth wires to the power outlet.
- Disconnect the power supply before carrying out any work on the electrical circuit or carrying out any safety work. For models with a plug, make sure the plug is easily accessible after installation.
- Do not connect the power before installation is complete.
- Do not use the appliance if the power cable or plug are damaged. If the power cable is damaged it must be replaced by the manufacturer, retailer or other qualified person to avoid a hazard.
- Since the temperature of the cooling circuit is high, keep the interconnecting cable away from the copper pipe.
- The unit must be installed in accordance with national wiring regulations.
- Installation must only be performed by trained individuals in accordance with regulations.

Rated current of appliance (A)	Nominal corss-sectional area (mm^2)
> 3 e ≤ 6	0.75
> 6 e ≤ 10	1
> 10 e ≤ 16	1.5
> 16 e ≤ 25	2.5
> 25 e ≤ 32	4
> 32 e ≤ 40	6



The unit is charged with a slightly inflammable refrigerant, R32. Improper handling of this gas may expose people and materials to serious damage. More details on this refrigerant are given at the beginning of this manual.

REQUIREMENTS FOR OPERATIONS AT HEIGHT

- When carrying out installation at 2 m or higher above the base level, safety belts must be worn and ropes of sufficient strength be securely fastened to the outdoor unit, to prevent falling that could cause personal injury or death as well as property loss.

GROUNDING REQUIREMENTS

- The air conditioner is the class I electrical appliance and must ensure a reliable grounding.
- Do not connect the grounding wire to a gas pipe, water pipe, lightning rod, telephone line, or a circuit poorly grounded to the earth.
- The grounding wire is specially designed and shall not be used for other purpose, nor shall it be fastened with a common tapping screw.
- Interconnection cord diameter should be recommended as per instruction manual, and with type O terminal that meet local standards (internal diameter of type O terminal needs to match the screw size of the unit, no more than 4.2 mm). After installation, check the screws whether have been fixed effectively, and there is no risk of loosening.
- An all-pole isolating switch with a minimum contact gap of 3mm in each pole must be connected to the fixed cable.
- Insert a power switch with sufficient power. The air switch must include a magnetic and thermal function to protect against short circuits and overloads. (Attention: Do not use only the fuse to protect the circuit)

Magnetothermal power switch
9K - 8A
12K - 9,5A

OTHERS

- The connection method of the air conditioner and the power cable and the interconnection method of each independent element shall be subject to the wiring diagram affixed to the machine.
- The model and rating value of the fuse shall be subject to the silkscreen on corresponding controller or fuse sleeve.

INSTALLATION OF INDOOR UNIT

DIMENSION DRAWING OF INDOOR UNIT INSTALLATION

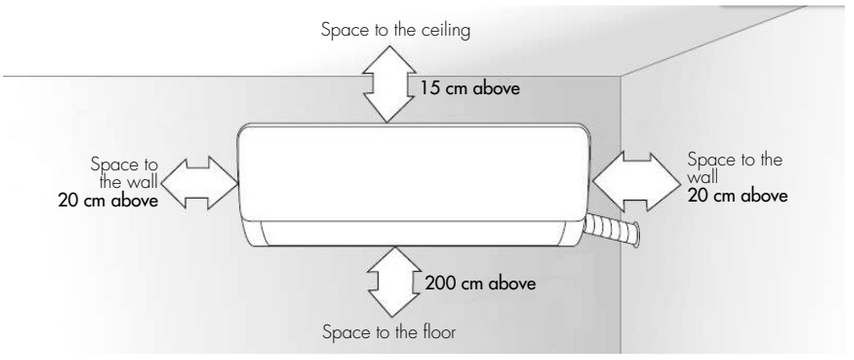

MOUNTING PLATE

1. The wall for installation of the indoor unit shall be hard and firm, so as to prevent vibration.
2. Use the "+" type screw to fasten the peg board, horizontally mount the peg board on the wall, and ensure the lateral horizontal and longitudinal vertical.
3. Pull the peg board by hand after the installation, to confirm whether it is solid.

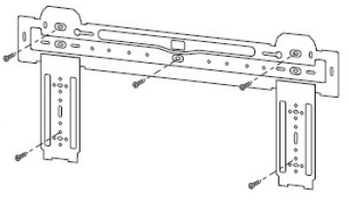

WALL-THROUGH HOLE

1. Make a hole with an electric hammer or a water drill at the predetermined position on the wall for piping, which shall slant outwardly by 5°-10°.
2. To protect the piping and the cables from being damaged running through the wall, and from the rodents that may inhabit in the hollow wall, a pipe protecting ring shall be installed and sealed with putty.

Note: usually, the wall hole is Ø60 mm ~ Ø80 mm. Avoid pre-buried power wire and hard wall when making the hole.

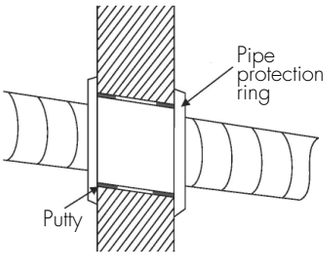

ROUTE OF PIPELINE

Depending on the position of the unit, the piping may be routed sideway from the left or the right (Fig 1), or vertically from the back (Fig 2) (depending on the pipe length of the indoor unit).

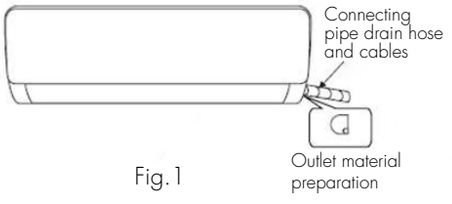

Fig.1

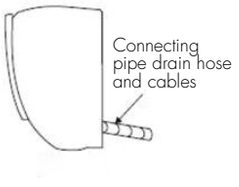

Fig.2

DRAIN PIPE CONNECTION

1. Remove the fixed part to pull out pipe of indoor machine from the case. Screw the hexagon nut in the left of the joint to the end with your hand.
2. Connect the connecting pipe to the indoor unit: Aim at the pipe center, tighten the Taper nut with fingers, and then tighten the Taper nut with a torque wrench, and the direction is shown in diagram on the right. The torque used is shown in the following table.

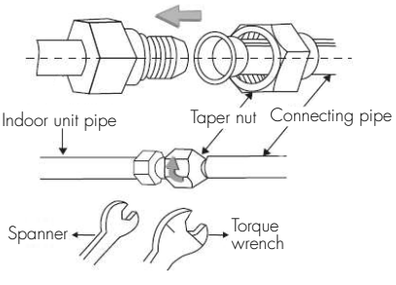

Note: carefully check if there is any damage of joints before installation. The joints shall not be reused, unless after re-flaring the pipe.

Tightening torque table

The size of pipe (mm)	Torque (N • m)
Φ6/Φ6.35	15~25
Φ9/Φ9.52	35~40
Φ12/Φ12/Φ7	45~60
Φ15.88	73~78
Φ19.05	75~80

WRAP THE PIPING

1. Use the insulation sleeve to wrap the joint part the indoor unit and the connection pipe, and then use insulating material to pack and seal insulation pipe, to prevent generation of condensate water on the joint part.
2. Connect the water outlet with drain pipes, and make the connection pipe, cables, and the drain hose straight.
3. Use plastic cable ties to wrap the connecting pipes, cables and drain hose. Run the pipe sloping downward.

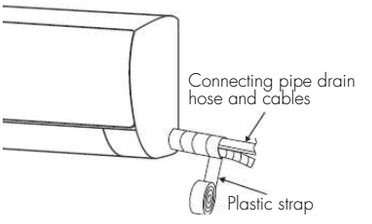

FIXING THE INDOOR UNIT

1. Hang the indoor unit on the peg board, and move the unit from left to right to ensure that the hook is properly positioned in the peg board.
2. Push toward the lower left side and the upper right side of the unit toward the peg board, until the hook is embedded in the slot and makes a “click” sound.

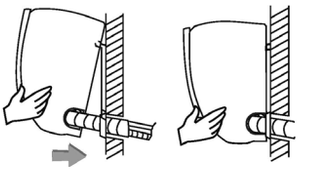

INTERCONNECTION CORD INSTALLATION

Connect interconnection cord of indoor unit

1. Open the panel, remove the screw on the wiring cover and then take down the cover.
2. Make the interconnection cord go through the cable-cross hole at the back of indoor unit and then pull it out from the front side. (Some models do not have a signal cable).
3. Remove the wire clip; connect the interconnection cord to the wiring terminal according to the wiring diagram; tighten the screw and then fix the interconnection cord with wire clip.
4. Put wiring cover back and then tighten the screw.
5. Close the panel.

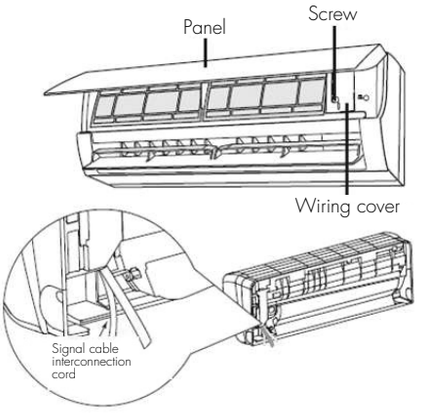

AFTER INSTALLATION CHECKS

1. The screws whether have been fixed effectively, and there is no risk of loosening.
2. Connector of display board whether put in the right place and do not touch the terminal board.
3. Control box cover whether cover tightly.

INSTALLATION OF OUTDOOR UNIT

DIMENSION DRAWING OF OUTDOOR UNIT INSTALLATION

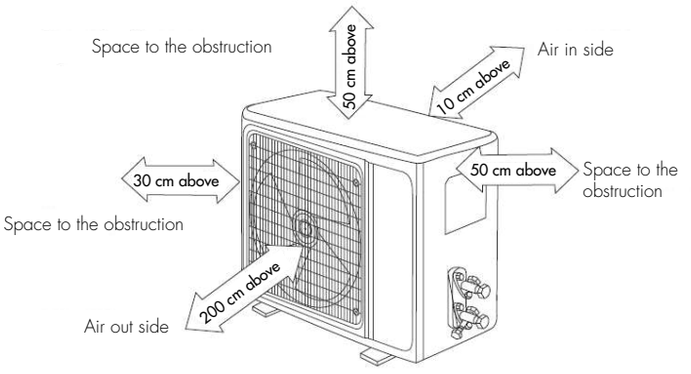

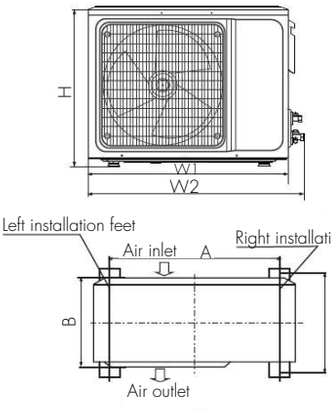

Installation outdoor unit bolt

Model	Outdoor unit size on shape W1(W2)*H*D (mm)	A (mm)	B (mm)
14K - 18K	785x300x555	546	316
21K	900x350x700	630	350

REFRIGERATING CONNECTIONS

⚠ Use equipment and connecting pipes suitable for R32 refrigerator.

⚠ **Always write the additional refrigerant charge on the data label affixed to the unit outside.**

MODEL	14K-18K	21K
Standard refrigerant charge piping lenght (m)	3 - 7,5	3 - 7,5
Maximum lenght of pipes with additional charge (m)	40	60
Maximum lenght of pipes for units (m)	25	30
Additional charge (g/m)	25	25
Max. height between units (outdoor on top) (m)	10	10
Max. height between units (indoor on top) (m)	15	15

INSTALL THE CONNECTION PIPE

Connect the Outdoor Unit with Connecting Pipe: Aim the counter-bore of the connecting pipe at the stop valve, and tighten the Taper nut with fingers. Then tighten the Taper nut with a torque wrench.
When prolonging the piping, extra amount of refrigerant must be added so that the operation and performance of the air conditioner will not be compromised

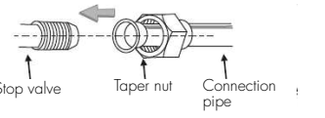

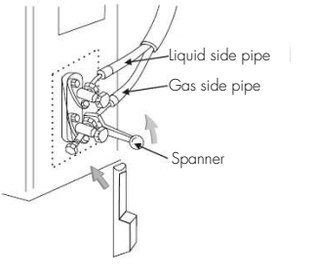

Note:
1. The joints shall not be reused, unless after re-flaring the pipe.
2. After installation, check the stop valve cover whether be fixed effectively.

WIRING CONNECTION

1. Loosen the screws and remove E-parts cover from the unit.
2. Connect the cables respectively to the corresponding terminals of the terminal board of the outdoor unit (see the wiring diagram), and if there are signals connected to the plug, just conduct butt joint.
3. Ground wire: Remove the grounding screw out of the electric bracket, cover the grounding wire end onto the grounding screw and screw it into the grounding hole.
4. Fix the cable reliably with fasteners (Pressing board).
5. Put the E-parts cover back in its original place and fasten it with screws.

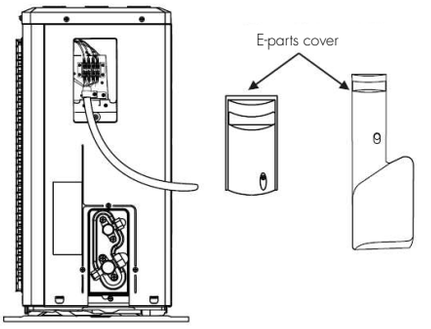

⚠ Insert a circuit breaker with sufficient power and observe the following table:

Magnetothermic switch power
14K - 12A
18K - 13A
21K - 14A

WIRING DIAGRAM

Indoor unit

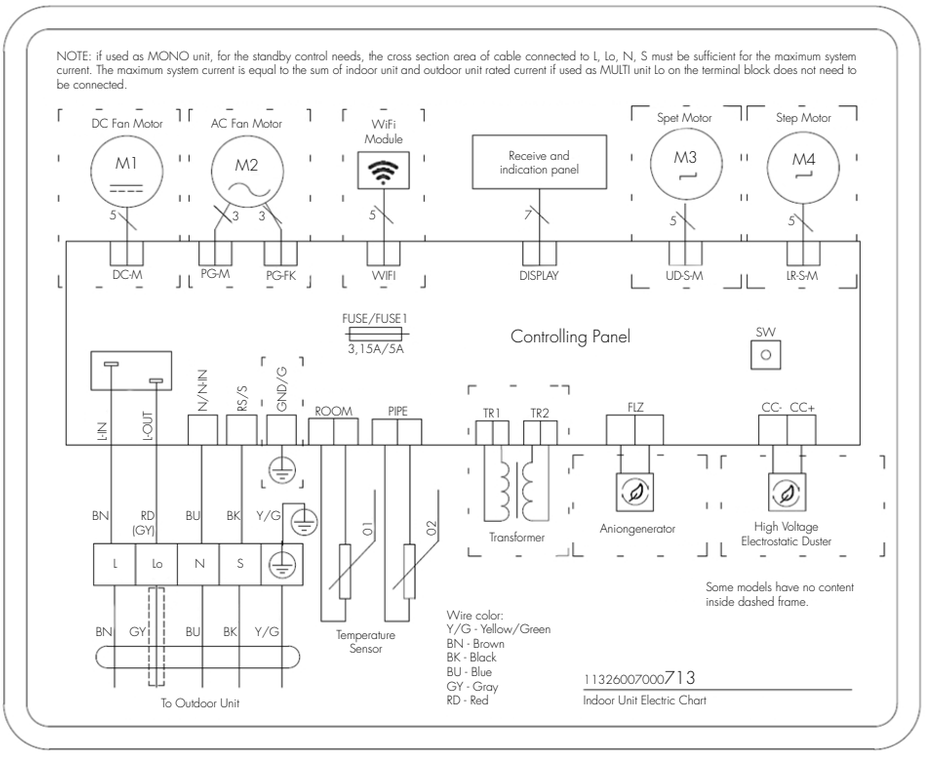

Outdoor unit

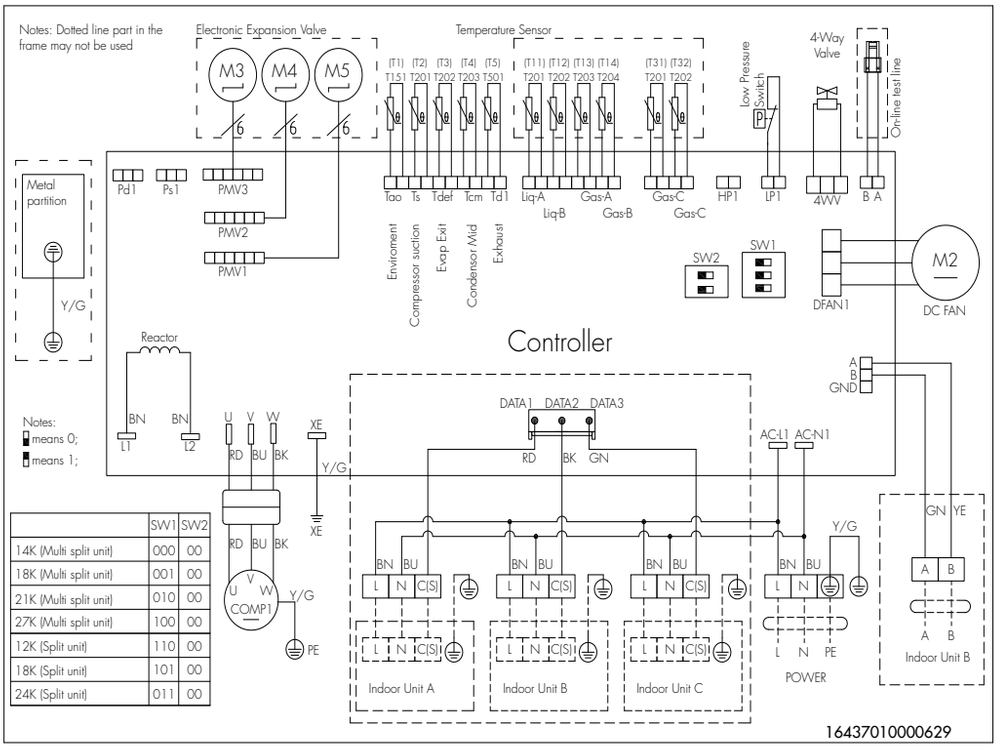

	SW1	SW2
14K (Multi split unit)	000	00
18K (Multi split unit)	001	00
21K (Multi split unit)	010	00
27K (Multi split unit)	100	00
12K (Split unit)	110	00
18K (Split unit)	101	00
24K (Split unit)	011	00

Outdoor Side

ELECTRIC CONNECTION

Connection between outdoor unit and indoor unit.

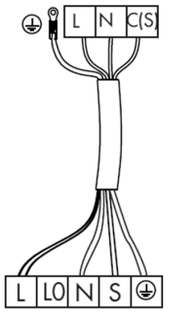

Indoor Side

VACUUMING

- **Exclusive R32 refrigerant pump must be used in making R32 refrigerant vacuum.**

  Before working on the air conditioner, remove the cover of the stop valve (gas and liquid valves) and be sure to retighten it afterward (to prevent the potential air leakage).

  1. To prevent air leakage and spilling tighten all connecting nut of all flare tubes.
  2. Connect the stop valve, charge hose, manifold valve, and vacuum pump.
  3. Fully open the handle Lo of the manifold valve and apply vacuum for at least 15 minutes and check that the compound vacuum gauge reads - 0.1MPa (-76cmHg).
  4. After applying vacuum, fully open the stop valve with a hex wrench.
  5. Check that both indoor and outdoor connections are free of air leakage.

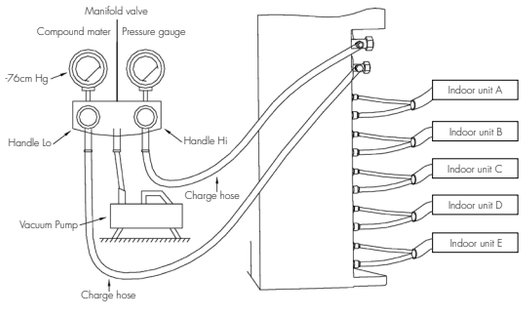

OUTDOOR CONDENSATION DRAINAGE

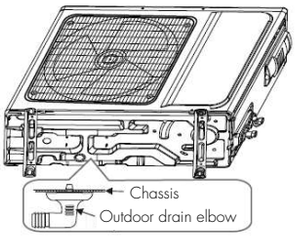

When the unit is heating, the condensing water and defrosting water can be out reliably through the drain house.
Installation: install the outdoor drain elbow in Φ25 hole on the base plate, and joint the drain hose to the elbow, so that the waste water formed in the outdoor unit can be drained out to a proper plate.

CHECK AFTER INSTALLATION

- Electrical Safety Check
  1. If the supply voltage is as required.
  2. If there is any faulty or miss connection in each of the power, signal and grounding wires.
  3. If the grounding wire of the air conditioner is securely grounded.

- Installation Safety Check
  1. If the installation is secure.
  2. If the water drain is smooth.
  3. If the wiring and piping are correctly installed.
  4. Check that no foreign matter or tools are left inside the unit.
  5. Check the refrigerant pipeline is protected well.

- Leak test of the refrigerant
  Depending on the installation method, the following methods may be used to check for suspect leak, on areas such as the four connections of the outdoor unit and the cores of the cut-off valves and t-valves:
  1. Bubble method: apply of spray a uniform layer of soap water over the suspected leak spot and observe carefully for bubble.
  2. Instrument method: checking for leak by pointing the probe of the leak detector according to the instruction to the suspect points of leak.

Note: make sure that the ventilation is good before checking.

TEST OPERATION

- Test Operation preparation:
  1. Verify that all piping and connection cables are well connected.
  2. Confirm that the values at the gas side the liquid-side are fully open.
  3. Connect the power cable to an independent power socket.
  4. Install batteries in remote control.

  Note: Make sure that the ventilation is good before testing.

- Test Operation method:
  1. Turn on the power and push the ON/OFF switch button of the remote controller to start the air conditioner.
  2. Select COOL, HEAT (not available on cool-only models), SWING and other operation modes with the remote controller and see if the operation is ok.

MAINTENANCE NOTES

ATTENTION: for maintenance or scrap, please contact authorized service centers. Maintenance by unqualified person may cause dangers.

APPENDICES

Piping configuration:

Connecting pipe diameter models 14K - 18K	
Liquid pipe (mm)	Gas pipe (mm)
2x6,35 (1/4")	2x9,52 (3/8")

Connecting pipe diameter model 21K	
Liquid pipe (mm)	Gas pipe (mm)
3x6,35 (1/4")	3x9,52 (3/8")

PROCEDURE FOR EXTENDING THE PIPING

Note: improper extension of piping is the main cause of refrigerant leaks. Proceed as shown below:

1. Cut the pipe.
   - Check the length of the pipe based on the distance between the indoor unit and outdoor unit.
   - Cut the required pipe using a pipe cutter.

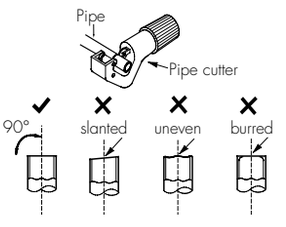

2. Remove burrs.
   - Remove burrs with a file, ensuring they do not go into the pipe.

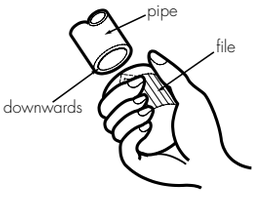

3. Secure an insulating tube.

4. Install a union nut
   - Remove the union nut on the indoor connecting pipe and outdoor valve. Install the union nut on the pipe.

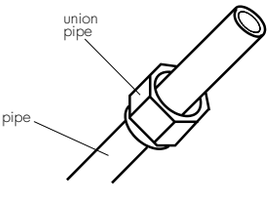

5. Expand the port
   - Expand the port using a pipe expander:

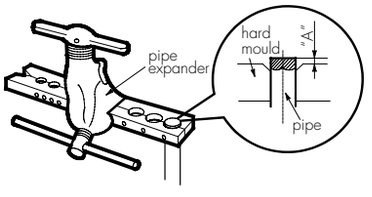

   - NB: varies according to diameter

Outdoor diameter (mm)	A (mm)	
	Max.	Min.
6.35(1/4")	1.3	0.7
9.52 (3/8")	1.6	1.0
12.7 (1/2")	1.8	1.0
15.88 (5/8")	2.4	2.2

6. Inspection.
   - Check the quality of the expanded port. If defective, expand the port again following the procedure described above.

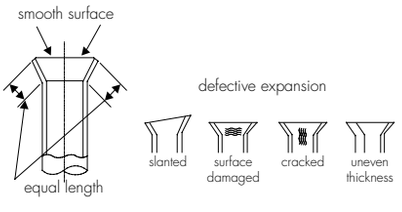

WARNINGS FOR THE REFRIGERATION SYSTEM SPECIALIST

Here are warnings and safety instructions for the maintenance of systems containing flammable refrigerant (repairs should only be carried out by specialists).

1. **Any person involved** in the work or in the interruption of a refrigeration circuit must be equipped with PEF (European Refrigerators License) as required by the D.P.R. n.146/2018 implementing Regulation (EU) no. 573/2024.

2. **Maintenance** should only be performed as recommended by the equipment manufacturer. Maintenance and repairs that require the assistance of other qualified personnel must be performed under the supervision of the person competent in the use of flammable refrigerants.

Before starting work on systems containing flammable refrigerants, safety checks are required to ensure that the risk of ignition is minimized.

1. **Checks to be carried out on systems that use flammable refrigerants:**
   - the charge must be proportionate to the size of the room in which the units containing refrigerant are installed;
   - units and ventilation openings must function properly and are not obstructed;
   - if an indirect refrigerant circuit is used, the secondary circuit must be checked for the presence of refrigerant;
   - the marking on the equipment must be visible and indelible. Illegible markings and signs must be corrected;
   - refrigerant piping or components must be installed in a location where they are unlikely to be exposed to any substance that can corrode the component-containing refrigerant, unless the components are constructed from materials that are inherently resistant to corrosion or are adequately protected against corrosion.

2. **Checks on electrical devices.** Repair and maintenance of electrical components must include initial safety checks and component inspection procedures. If there is a fault that could compromise safety, do not connect the power supply to the circuit until it is satisfactorily resolved. If the fault cannot be remedied immediately, but operation must continue, a suitable interim solution must be used. This must be reported to the owner of the equipment so that all parties are informed.
   Initial security checks include:
   - Check that the capacitors are discharged: this must be done safely to avoid the risk of sparks;
   - Verify that no electrical components and wiring are exposed while charging, restoring or draining the system;
   - Check that there is ground continuity.

3. **Check for refrigerant leaks.** The area should be checked with an appropriate refrigerant detector before and during work, to ensure that the technician is aware of potentially toxic or flammable atmospheres. Make sure that the leak detection equipment in use is suitable for use with all applicable refrigerants, i.e. non-sparking, properly sealed or intrinsically safe.
   Check for R32 refrigerant leaks. Note: check for refrigerant leakage in an environment where there are no potential sources of ignition. No halogen probe (or any other detector that uses an open flame) should be used.
   Leak Detection Method: For systems with R32 refrigerant, an electronic leak detection tool is available to detect and leak detection should not be conducted in a refrigerant environment. Make sure the leak detector does not become a potential source of ignition and is applicable to the measured refrigerant. The leak detector must be set for the minimum flammable fuel concentration (percentage) of the refrigerant. Calibrate and adjust to the correct gas concentration (no more than 25%) with the refrigerant used. The fluid used in leak detection is applicable to most refrigerants. But do not use chloride based solvents to prevent the reaction between chlorine and refrigerants and corrosion of copper piping. If you suspect a leak, remove all fire from the scene or put out the fire. If the location of the leak is to be welded, then all refrigerants must be recovered or isolate all refrigerants away from the leak site (using the shut-off valve). Before and during soldering, use OFN to purify the entire system.

4. **Presence of fire extinguisher.** If hot work is to be performed on the refrigeration equipment or any associated part, adequate fire fighting equipment must be available. It is necessary to have a dry powder or CO_2 extinguisher adjacent to the charging area.

5. **Ventilated area.** Make sure the area is outdoors or is adequately ventilated before breaking into the system or performing any hot work. Continuous ventilation must be present during the period in which the work is being carried out. Ventilation should safely disperse the released refrigerant and preferably expel it to the atmosphere.

6. **Controls on refrigeration equipment.** When replacing electrical components, they must be fit for purpose and with

1. the correct specifications. The manufacturer's maintenance and service guidelines should always be followed. If in doubt, consult the manufacturer's technical department for assistance.

2. Repairs on sealed components. During repairs to sealed components, all electrical supplies must be disconnected from the equipment being worked on before removing the sealed covers, etc. If it is absolutely necessary to have an electrical power supply to the equipment during maintenance, then a leak detection device must be placed at the most critical point to warn of a potentially dangerous situation. Particular attention must be paid to the following to ensure that, by working on the electrical components, the casing is not altered in such a way as to compromise the level of protection. This includes damage to cables, excessive number of connections, terminals not made to original specifications, damage to gaskets, incorrect assembly of cable glands, etc.
   - Make sure the appliance is mounted securely.
   - Ensure that gaskets or sealing materials are not degraded to the point that they no longer serve the purpose of preventing the entry of flammable atmospheres. Replacement parts must conform to the manufacturer's specifications.

   Note: the use of silicone sealant can inhibit the effectiveness of some types of leak detection equipment. Intrinsically safe components do not need to be isolated before working on them.

3. Repair of intrinsically safe components. Do not apply permanent inductive or capacitive loads to the circuit without ensuring that it does not exceed the voltage and current allowed for the equipment in use. The intrinsically safe components are the only ones that can be worked on in the presence of a flammable atmosphere. The test equipment must be of the correct evaluation. Replace components only with parts specified by the manufacturer. Other parts can cause the refrigerant to ignite in the atmosphere due to a leak..

4. Wiring. Verify that the wiring is not subject to wear, corrosion, excessive pressure, vibration, sharp edges, or other adverse environmental effects. The control must also take into account the effects of aging or continuous vibrations from sources such as compressors or fans.

5. Deactivation. Before carrying out this procedure, it is essential that the technician is fully familiar with the equipment and all its details. Good practice is recommended that all refrigerants be recovered safely. Before the task is performed, a sample of the oil and refrigerant must be taken in case an analysis is required before reuse of the recovered refrigerant. It is essential that electricity is available before the start of the activity.
   A. Become familiar with the equipment and its operation.
   B. Electrically isolate the system.
   C. Before attempting the procedure, make sure that:
      - mechanical handling equipment is available, if required, for handling the refrigerant cylinders;
      - all personal protective equipment is available and used correctly;
      - the recovery process is supervised at all times by a competent person;
      - Recovery equipment and cylinders comply with appropriate standards.
   D. If possible, drain the refrigerant system.
   E. If vacuum is not possible, make a manifold so that the refrigerant can be removed from the various parts of the system.
   F. Make sure the cylinder is placed on the scale before recovery takes place.
   G. Start the recovery machine and operate according to the manufacturer's instructions
   H. Do not overfill the cylinders. (Not more than 80% by volume of liquid charge).
   I. Do not exceed, even temporarily, the maximum working pressure of the cylinder.
   J. When the cylinders have been filled correctly and the process is complete, ensure that the cylinders and equipment are promptly removed from the site and that all isolation valves on the equipment are closed.
   K. Recovered refrigerant should not be charged to another refrigeration system unless it has been cleaned and checked.

6. Labeling. The equipment must be labeled indicating that it has been shut down and drained of refrigerant. The label must be dated and signed. For appliances containing flammable refrigerants, make sure there are labels on the appliance indicating that the appliance contains flammable refrigerant..

Recovery

When removing refrigerant from a system, whether for maintenance or decommissioning, It is recommended that all refrigerants be removed safely. When transferring refrigerant to cylinders, ensure that only appropriate refrigerant recovery cylinders are used. Make sure the correct number of cylinders are available to maintain full system charge. All cylinders to be used are designated for the recovered refrigerant and labeled for that refrigerant (i.e. special cylinders for recovering refrigerant). The cylinders must be complete with pressure relief valve and relative shut-off valves in good working order. Empty recovery cylinders are evacuated and, if possible, cooled before recovery takes place.

If compressors or compressor oils need to be removed, make sure they have been evacuated to an acceptable level to ensure that flammable refrigerant does not remain within the lubricant. The evacuation process must be carried out before returning the compressor to suppliers. To speed up this process, only electrical heating of the compressor body must be used. When oil is drained from a system, it must be done safely.

Work procedure.

The work must be carried out according to a controlled procedure in order to minimize the risk of the presence of flammable gas or vapor during the execution of the work.

1. General work area: all maintenance personnel and others working in the local area should be educated on the nature of the work being performed. Work in confined spaces must be avoided. The area around the work area must be sectioned. Ensure that conditions within the area have been secured by the control of flammable material.
2. No ignition sources: No person carrying out work in relation to a refrigeration system involving exposure to piping must use sources of ignition in a way that creates the risk of fire or explosion. All possible sources of ignition, including cigarette smoke, must be kept sufficiently far from the place of installation, repair, removal and disposal, during which the refrigerant may possibly be released into the surrounding space. Before starting work, the area around the equipment must be checked to ensure that there is no risk of flammability or ignition hazards. "No smoking" signs must be displayed.

Removal and evacuation.

When breaking into the refrigerant circuit to make repairs or for any other purpose, conventional procedures must be used. However, for flammable refrigerants it is important to follow the best procedures as there is a risk of flammability. The following procedure must be followed:

- remove the refrigerant;
- purge the circuit with inert gas; evacuate;
- purge again with inert gas;
- open the circuit by cutting or brazing.

The refrigerant charge must be recovered in the correct recovery cylinders. For appliances containing flammable refrigerants, the system must be flushed with OFN to make the unit safe. You may need to repeat this process several times. Compressed air or oxygen must not be used for purging refrigerant systems. For appliances containing flammable refrigerants, flushing must be achieved by breaking the vacuum in the system with OFN and continuing to fill until the operating pressure is reached, then discharging to the atmosphere and finally lowering the vacuum. This process must be repeated until there is no more refrigerant in the system. When the final OFN charge is used, the system must be vented to atmospheric pressure to allow the work to be carried out. This operation is absolutely essential if you want to carry out brazing operations on the pipes. Make sure that the vacuum pump outlet is not close to ignition sources and that ventilation is available.

Charging procedures.

In addition to conventional charging procedures, the following requirements must be followed:

- Make sure that contamination of different refrigerants does not occur when using charging equipment. Hoses or lines should be as short as possible to minimize the amount of refrigerant they contain.
- The cylinders must be kept upright.
- Make sure the refrigeration system is grounded before charging the system with refrigerant.
- Label the system when charging is complete (if not already done).
- Be very careful not to overfill the refrigeration system.

Before recharging the system, it must be pressure tested with the appropriate purge gas. The system must undergo a leak test upon completion of the charge but prior to commissioning. A subsequent leak test
must be carried out before leaving the site.

REGULATION (EU) No. 573/2024 - F-GAS

The unit contains R32, a fluorinated greenhouse gas with global warming potential (GWP) = 675. Do not release R32 into the atmosphere.

CLIMADESIGN DUAL 14000 UE - Kg. 1 = 0,675 Tonn CO_2 equiv.

CLIMADESIGN DUAL 18000 UE N - Kg. 1,03 = 0,695 Tonn CO_2 equiv.

CLIMADESIGN TRIAL 21000 UE - Kg. 1,15 = 0,776 Tonn CO_2 equiv.

improve your life

www.argoclima.com

MADE IN CHINA

Argoclima assumes no responsibility for any errors or inaccuracies in the content of this manual and reserves the right to make to this, at any time and without notice, any changes deemed appropriate for any technical or commercial need.